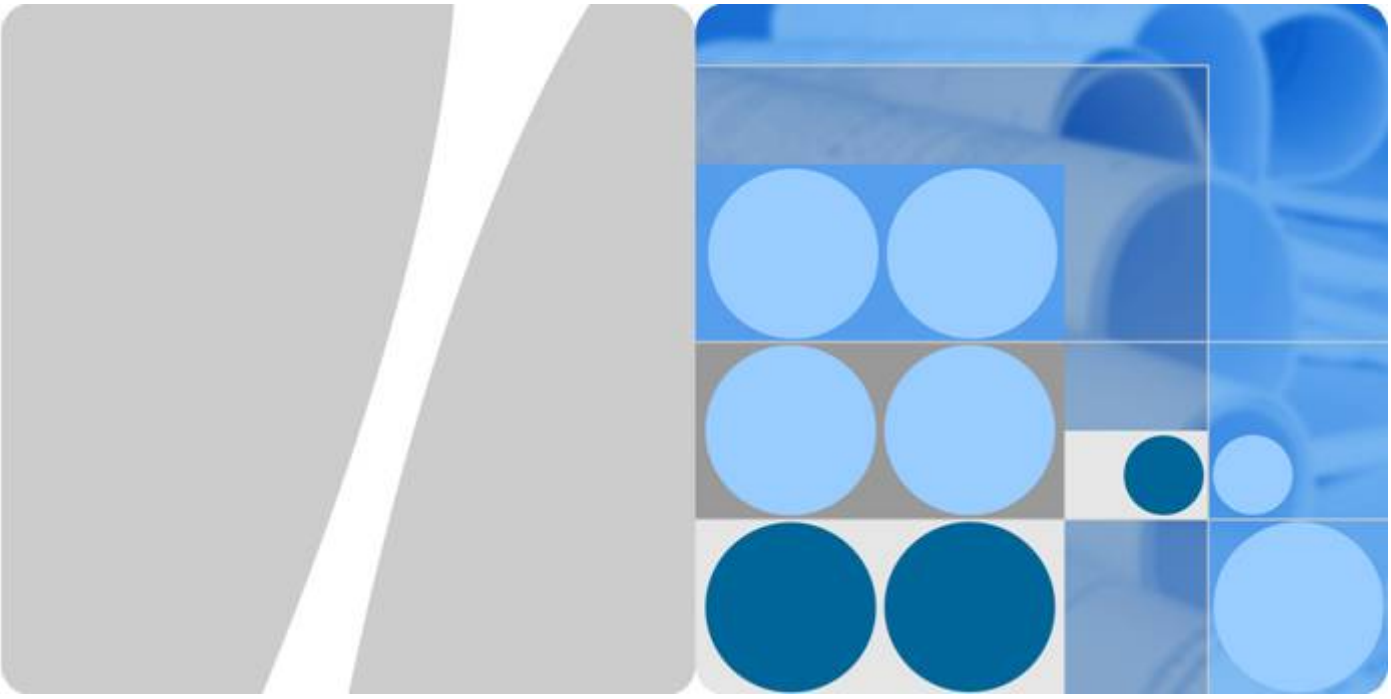

SUN2000-(90KTL, 95KTL, 100KTL, 105KTL) Series

User Manual

Issue 13

Date 2021-01-19

HUAWEI TECHNOLOGIES CO., LTD.

Copyright © Huawei Technologies Co., Ltd. 2021. All rights reserved.

No part of this document may be reproduced or transmitted in any form or by any means without prior written consent of Huawei Technologies Co., Ltd.

Trademarks and Permissions

HUAWEI and other Huawei trademarks are trademarks of Huawei Technologies Co., Ltd.
All other trademarks and trade names mentioned in this document are the property of their respective holders.

Notice

The purchased products, services and features are stipulated by the contract made between Huawei and the customer. All or part of the products, services and features described in this document may not be within the purchase scope or the usage scope. Unless otherwise specified in the contract, all statements, information, and recommendations in this document are provided "AS IS" without warranties, guarantees or representations of any kind, either express or implied.

The information in this document is subject to change without notice. Every effort has been made in the preparation of this document to ensure accuracy of the contents, but all statements, information, and recommendations in this document do not constitute a warranty of any kind, express or implied.

Huawei Technologies Co., Ltd.

Address: Huawei Industrial Base
Bantian, Longgang
Shenzhen 518129
People's Republic of China

Website: https://e.huawei.com

About This Document

Purpose

This document describes the SUN2000-90KTL-H0, SUN2000-90KTL-H1, SUN2000-90KTL-H2, SUN2000-95KTL-INH0, SUN2000-95KTL-INH1, SUN2000-100KTL-H0, SUN2000-100KTL-H1, SUN2000-100KTL-H2, and SUN2000-105KTL-H1 (SUN2000 for short) in terms of their installation, electrical connections, commissioning, maintenance, and troubleshooting. Before installing and operating the SUN2000, ensure that you are familiar with the features, functions, and safety precautions provided in this document.

Intended Audience

This document is intended for photovoltaic (PV) power plant personnel and qualified electrical technicians.

Symbol Conventions

The symbols that may be found in this document are defined as follows.

Symbol	Remarks
DANGER	Indicates a hazard with a high level of risk which, if not avoided, will result in death or serious injury.
WARNING	Indicates a hazard with a medium level of risk which, if not avoided, could result in death or serious injury.
CAUTION	Indicates a hazard with a low level of risk which, if not avoided, could result in minor or moderate injury.

 Copyright © Huawei Technologies Co., Ltd.

Symbol	Remarks
NOTICE	Indicates a potentially hazardous situation which, if not avoided, could result in equipment damage, data loss, performance deterioration, or unanticipated results. NOTICE is used to address practices not related to personal injury.
NOTE	Supplements the important information in the main text. NOTE is used to address information not related to personal injury, equipment damage, and environment deterioration.

Change History

Changes between document issues are cumulative. The latest document issue contains all updates made in previous issues.

Issue 13 (2021-01-19)

Updated **B Grid Codes**.

Issue 12 (2020-12-18)

Updated **5.2.1 MBUS Communication**.

Issue 11 (2020-08-30)

Updated **2.2 Product Introduction**.

Updated **4.3 Determining the Installation Position**.

Updated **8.3 Routine Maintenance**.

Issue 10 (2020-03-28)

Updated **4.5 Installing the SUN2000**.

Updated **5.2 Preparing Cables**.

Updated **5.6 Installing the DC Input Power Cable**.

Updated **B Grid Codes**.

Issue 09 (2020-02-18)

Updated **7.1 Operations with the SUN2000 App**.

Updated **10 Technical Data**.

 Copyright © Huawei Technologies Co., Ltd.

Issue 08 (2019-12-18)

Updated **3 Storage**.

Added **8.2 Power-Off for Troubleshooting**.

Issue 07 (2019-07-17)

Updated **2.3.1 Appearance**.

Updated **10 Technical Data**.

Issue 06 (2019-06-27)

Updated **5.2.1 MBUS Communication**.

Updated **7.1.3 Logging In to the App**.

Issue 05 (2018-11-30)

Updated **5.8 (Optional) Installing the Power Cable of the Tracking System**.

Issue 04 (2018-10-23)

Updated **2.2 Product Introduction**.

Updated **10 Technical Data**.

Issue 03 (2018-07-23)

Added description about the SUN2000-90KTL-H2, SUN2000-95KTL-INH1, SUN2000-100KTL-H2, and SUN2000-105KTL-H1 models.

Issue 02 (2018-06-23)

Updated **10 Technical Data**.

Issue 01 (2018-05-17)

This issue is used for first office application (FOA).

 Copyright © Huawei Technologies Co., Ltd.

Contents

About This Document ii

1 Safety Precautions 1

1.1 General Safety 1
1.2 Personnel Requirements 2
1.3 Electrical Safety 3
1.4 Installation Environment Requirements 4
1.5 Mechanical Safety 4
1.6 Commissioning 5
1.7 Maintenance and Replacement 6

2 Overview 7

2.1 Models 7
2.2 Product Introduction 9
2.3 Product Appearance 11
2.3.1 Appearance 11
2.3.2 Indicator Status 16
2.3.3 Label Description 18
2.4 Working Principles 19
2.4.1 Circuit Diagram 19
2.4.2 Working Modes 20

3 Storage 22

4 Installation 24

4.1 Checking Before Installation 24
4.2 Tool Preparation 25
4.3 Determining the Installation Position 26
4.4 Installing the Mounting Bracket 30
4.4.1 Support-Mounted Installation 31
4.4.2 Wall-Mounted Installation 32
4.5 Installing the SUN2000 33

5 Electrical Connections 38

5.1 Precautions 38
5.2 Preparing Cables 38

 Copyright © Huawei Technologies Co., Ltd.

5.2.1 MBUS Communication ... 39
5.2.2 RS485 Communication ... 43
5.3 Installing the PE Cable ... 48
5.4 Opening the Maintenance Compartment Door ... 49
5.5 Connecting an AC Output Power Cable ... 50
5.6 Installing the DC Input Power Cable ... 54
5.7 Connecting the RS485 Communications Cable ... 57
5.8 (Optional) Installing the Power Cable of the Tracking System ... 60
5.9 Closing the Maintenance Compartment Door ... 62

6 Commissioning ... 64
6.1 Checking Before Power-On ... 64
6.2 Powering On the SUN2000 ... 65

7 Man-Machine Interactions ... 66
7.1 Operations with the SUN2000 App ... 66
7.1.1 App Introduction ... 66
7.1.2 Downloading and Installing the App ... 67
7.1.3 Logging In to the App ... 68
7.1.4 Operations Related to the Advanced User ... 72
7.1.4.1 Setting Grid Parameters ... 73
7.1.4.2 Setting Protection Parameters ... 73
7.1.4.3 Setting Feature Parameters ... 74
7.1.5 Operations Related to the Special User ... 77
7.1.5.1 Setting Grid Parameters ... 78
7.1.5.2 Setting Protection Parameters ... 80
7.1.5.3 Setting Feature Parameters ... 82
7.1.5.4 Setting Power Adjustment Parameters ... 84
7.2 Operations with a USB Flash Drive ... 89
7.2.1 Exporting Configurations ... 89
7.2.2 Importing Configurations ... 91
7.2.3 Exporting Data ... 92
7.2.4 Upgrading ... 93

8 Maintenance ... 95
8.1 Powering Off the SUN2000 ... 95
8.2 Power-Off for Troubleshooting ... 96
8.3 Routine Maintenance ... 97
8.4 Troubleshooting ... 98

9 Handling the Inverter ... 108
9.1 Removing the SUN2000 ... 108
9.2 Packing the SUN2000 ... 108
9.3 Disposing of the SUN2000 ... 108

10 Technical Data ... 109

10.1 SUN2000-(90KTL, 95KTL) Series Technical Data 109
10.2 SUN2000-(100KTL, 105KTL) Series Technical Data 113
A Domain Name List of Management Systems 117
B Grid Codes 118
C Acronyms and Abbreviations 128

1 Safety Precautions

1.1 General Safety

Statement

Before installing, operating, and maintaining the equipment, read this document and observe all the safety instructions on the equipment and in this document.

The "NOTICE", "CAUTION", "WARNING", and "DANGER" statements in this document do not cover all the safety instructions. They are only supplements to the safety instructions. Huawei will not be liable for any consequence caused by the violation of general safety requirements or design, production, and usage safety standards.

Ensure that the equipment is used in environments that meet its design specifications. Otherwise, the equipment may become faulty, and the resulting equipment malfunction, component damage, personal injuries, or property damage are not covered under the warranty.

Follow local laws and regulations when installing, operating, or maintaining the equipment. The safety instructions in this document are only supplements to local laws and regulations.

Huawei will not be liable for any consequences of the following circumstances:

- Operation beyond the conditions specified in this document
- Installation or use in environments which are not specified in relevant international or national standards
- Unauthorized modifications to the product or software code or removal of the product
- Failure to follow the operation instructions and safety precautions on the product and in this document
- Equipment damage due to force majeure, such as earthquakes, fire, and storms
- Damage caused during transportation by the customer
- Storage conditions that do not meet the requirements specified in this document

 Copyright © Huawei Technologies Co., Ltd.

General Requirements

DANGER

Do not work with power on during installation.

- Do not install, use, or operate outdoor equipment and cables (including but not limited to moving equipment, operating equipment and cables, inserting connectors to or removing connectors from signal ports connected to outdoor facilities, working at heights, and performing outdoor installation) in harsh weather conditions such as lightning, rain, snow, and level 6 or stronger wind.
- After installing the equipment, remove idle packing materials such as cartons, foam, plastics, and cable ties from the equipment area.
- In the case of a fire, immediately leave the building or the equipment area, and turn on the fire alarm bell or make an emergency call. Do not enter the building on fire in any case.
- Do not scrawl, damage, or block any warning label on the equipment.
- Tighten the screws using tools when installing the equipment.
- Understand the components and functioning of a grid-tied PV power system and relevant local standards.
- Repaint any paint scratches caused during equipment transportation or installation in a timely manner. Equipment with scratches cannot be exposed to an outdoor environment for a long period of time.
- Do not open the host panel of the equipment.

Personal Safety

- If there is a probability of personal injury or equipment damage during operations on the equipment, immediately stop the operations, report the case to the supervisor, and take feasible protective measures.
- Use tools correctly to avoid hurting people or damaging the equipment.
- Do not touch the energized equipment, as the enclosure is hot.

1.2 Personnel Requirements

- Personnel who plan to install or maintain Huawei equipment must receive thorough training, understand all necessary safety precautions, and be able to correctly perform all operations.
- Only qualified professionals or trained personnel are allowed to install, operate, and maintain the equipment.
- Only qualified professionals are allowed to remove safety facilities and inspect the equipment.
- Personnel who will operate the equipment, including operators, trained personnel, and professionals, should possess the local national required qualifications in special operations such as high-voltage operations, working at heights, and operations of special equipment.

 Copyright © Huawei Technologies Co., Ltd.

- Only professionals or authorized personnel are allowed to replace the equipment or components (including software).

  NOTE

  - Professionals: personnel who are trained or experienced in equipment operations and are clear of the sources and degree of various potential hazards in equipment installation, operation, and maintenance
  - Trained personnel: personnel who are technically trained, have required experience, are aware of possible hazards on themselves in certain operations, and are able to take protective measures to minimize the hazards on themselves and other people
  - Operators: operation personnel who may come in contact with the equipment, except trained personnel and professionals

1.3 Electrical Safety

Grounding

- For the equipment that needs to be grounded, install the ground cable first when installing the equipment and remove the ground cable last when removing the equipment.
- Do not damage the ground conductor.
- Do not operate the equipment in the absence of a properly installed ground conductor.
- Ensure that the equipment is connected permanently to the protective ground. Before operating the equipment, check its electrical connection to ensure that it is securely grounded.

General Requirements

DANGER

Before connecting cables, ensure that the equipment is intact. Otherwise, electric shocks or fire may occur.

- Ensure that all electrical connections comply with local electrical standards.
- Obtain approval from the local electric utility company before using the equipment in grid-tied mode.
- Ensure that the cables you prepared meet local regulations.
- Use dedicated insulated tools when performing high-voltage operations.

AC and DC Power

DANGER

Do not connect or disconnect power cables with power on. Transient contact between the core of the power cable and the conductor will generate electric arcs or sparks, which may cause fire or personal injury.

 Copyright © Huawei Technologies Co., Ltd.

- Before making electrical connections, switch off the disconnector on the upstream device to cut off the power supply if people may contact energized components.
- Before connecting a power cable, check that the label on the power cable is correct.
- If the equipment has multiple inputs, disconnect all the inputs before operating the equipment.

Cabling

- When routing cables, ensure that a distance of at least 30 mm exists between the cables and heat-generating components or areas. This prevents damage to the insulation layer of the cables.
- Bind cables of the same type together. When routing cables of different types, ensure that they are at least 30 mm away from each other.
- Ensure that the cables used in a grid-tied PV power system are properly connected and insulated and meet specifications.

1.4 Installation Environment Requirements

- Ensure that the equipment is installed in a well ventilated environment.
- To prevent fire due to high temperature, ensure that the ventilation vents or heat dissipation system are not blocked when the equipment is running.
- Do not expose the equipment to flammable or explosive gas or smoke. Do not perform any operation on the equipment in such environments.

1.5 Mechanical Safety

Using Ladders

- Use wooden or fiberglass ladders when you need to perform live working at heights.
- When a step ladder is used, ensure that the pull ropes are secured and the ladder is held firm.
- Before using a ladder, check that it is intact and confirm its load bearing capacity. Do not overload it.
- Ensure that the wider end of the ladder is at the bottom, or protective measures have been taken at the bottom to prevent the ladder from sliding.
- Ensure that the ladder is securely positioned. The recommended angle for a ladder against the floor is 75 degrees, as shown in the following figure. An angle rule can be used to measure the angle.

 Copyright © Huawei Technologies Co., Ltd.

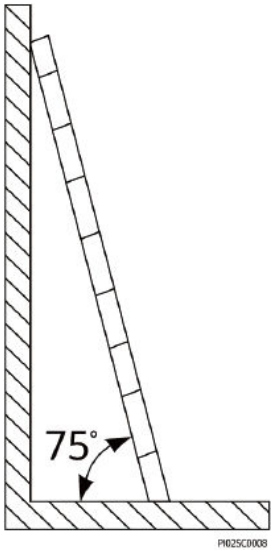

- When climbing a ladder, take the following precautions to reduce risks and ensure safety:
  - Keep your body steady.
  - Do not climb higher than the fourth rung of the ladder from the top.
  - Ensure that your body's center of gravity does not shift outside the legs of the ladder.

Drilling Holes

When drilling holes into a wall or floor, observe the following safety precautions:

- Wear goggles and protective gloves when drilling holes.
- When drilling holes, protect the equipment from shavings. After drilling, clean up any shavings that have accumulated inside or outside the equipment.

Moving Heavy Objects

- Be cautious to avoid injury when moving heavy objects.

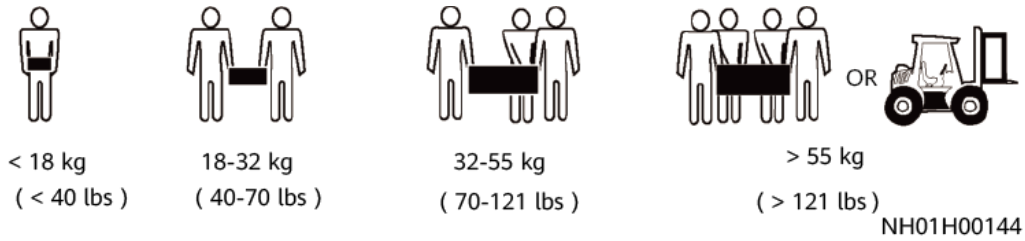

- When moving the equipment by hand, wear protective gloves to prevent injuries.

1.6 Commissioning

When the equipment is powered on for the first time, ensure that professional personnel set parameters correctly. Incorrect settings may result in inconsistency with local certification and affect the normal operation of the equipment.

1.7 Maintenance and Replacement

DANGER

High voltage generated by the equipment during operation may cause an electric shock, which could result in death, serious injury, or serious property damage. Prior to maintenance, power off the equipment and strictly comply with the safety precautions in this document and relevant documents.

- Maintain the equipment with sufficient knowledge of this document and using proper tools and testing equipment.
- Before maintaining the equipment, power it off and follow the instructions on the delayed discharge label to ensure that the equipment is powered off.
- Place temporary warning signs or erect fences to prevent unauthorized access to the maintenance site.
- If the equipment is faulty, contact your dealer.
- The equipment can be powered on only after all faults are rectified. Failing to do so may escalate faults or damage the equipment.

 Copyright © Huawei Technologies Co., Ltd.

2 Overview

2.1 Models

Model Number Description

This document involves the following product models:

- SUN2000-90KTL-H0
- SUN2000-90KTL-H1
- SUN2000-90KTL-H2
- SUN2000-95KTL-INH0
- SUN2000-95KTL-INH1
- SUN2000-100KTL-H0
- SUN2000-100KTL-H1
- SUN2000-100KTL-H2
- SUN2000-105KTL-H1

NOTE

The products look alike. The SUN2000-95KTL-INH0 is used as an example.

Figure 2-1 Model number

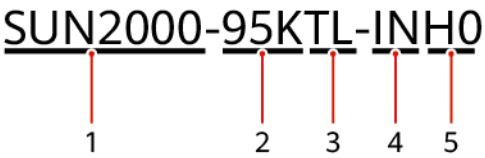

Table 2-1 Model number description

No.	Meaning	Description
1	Product	SUN2000: grid-tied PV inverter
2	Power	• 90K: The power level is 90 kW. • 95K: The power level is 95 kW. • 100K: The power level is 100 kW. • 105K: The power level is 105 kW.
3	Topology	TL: transformerless
4	Region	IN: India
5	Design code	H0/H1/H2: product series with the 1500 V DC input voltage

Model Identification

You can query the SUN2000 number by the model label on the external package and the nameplate on the side of the enclosure.

Figure 2-2 Label position on the external package

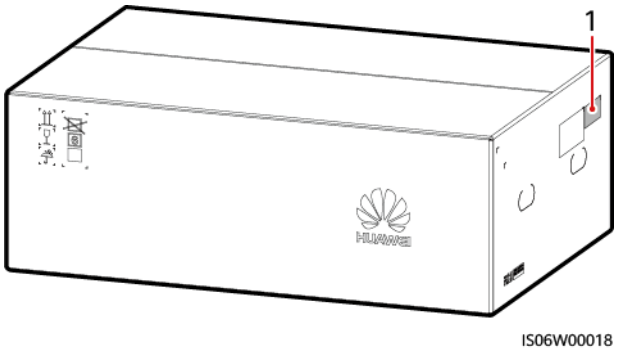

(1) Position of the model label

Figure 2-3 Nameplate

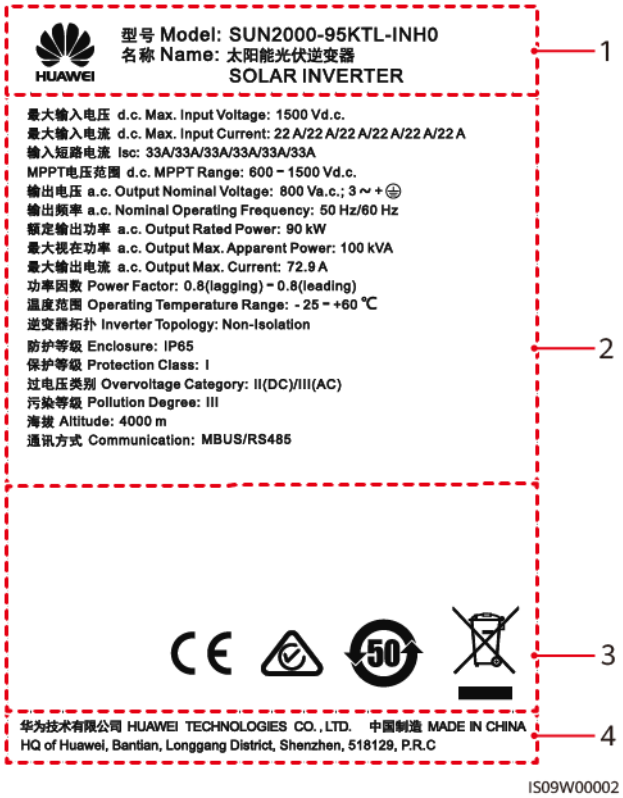

(1) Trademark and product model

(2) Important technical specifications

(3) Compliance symbols

(4) Company name and country of manufacture

NOTE

The nameplate figure is for reference only.

2.2 Product Introduction

Function

The SUN2000 is a grid-tied PV string inverter that converts the DC power generated by PV strings into AC power and feeds the power into the power grid.

Features

Intelligent

- Six independent maximum power point tracking (MPPT) circuits and 12 PV string inputs: Supports the flexible configuration of 2+2+2+2+2+2 strings.
- 12 routes of high-precision smart PV string monitoring: Help identify and rectify exceptions timely.
- MBUS networking: Uses the existing power line for communication and does not require an additional communications cable, which reduces the

construction and maintenance costs and improves communication reliability and efficiency.

- Smart I-V curve diagnosis: Implements I-V scanning and health diagnosis for PV strings. In this way, potential risks and faults can be detected in time, improving the plant operation & maintenance (O&M) quality.

Safe

- Embedded DC and AC SPDs: all-dimensional surge protection
- Embedded residual current monitoring unit: Immediately disconnects from the power grid upon detecting that the residual current exceeds the threshold.

Reliable

- Natural cooling
- Free fuse design
- Protected to IP65.
- Effective design against ground subsidence: The AC terminal block can be pulled down by up to 50 mm due to the pulling force.

Network Application

The SUN2000 applies to distributed grid-tied commercial PV systems and large-scale grid-tied PV plants. Typically, a grid-tied PV system consists of the PV string, SUN2000, AC combiner box, and step-up transformer.

Figure 2-4 Network application

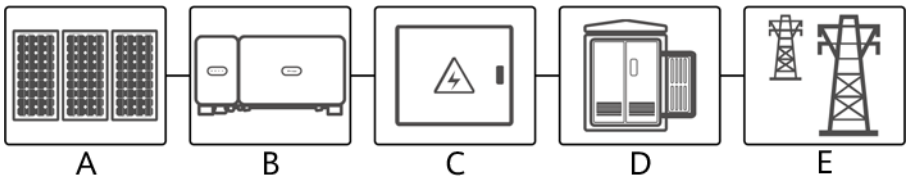

(A) PV string (B) SUN2000 (C) AC combiner box

(D) Step-up transformer (E) Power grid -

NOTE

The SUN2000 is powered by a dedicated power transformer instead of connecting to low voltage overhead power lines.

Supported Power Grid

The SUN2000 supports the IT power grid.

Figure 2-5 Supported power grid

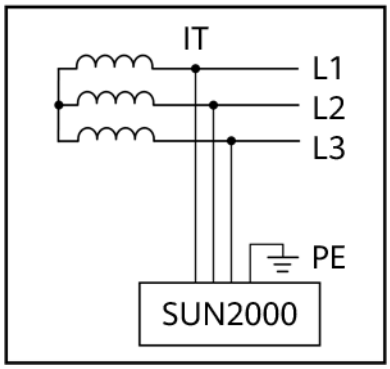

NOTE

The SUN2000 can also apply to the AC power system with the neutral point grounding of the step-up transformer. The SUN2000 itself does not connect to any neutral wire.

Figure 2-6 AC power system with the neutral point grounding

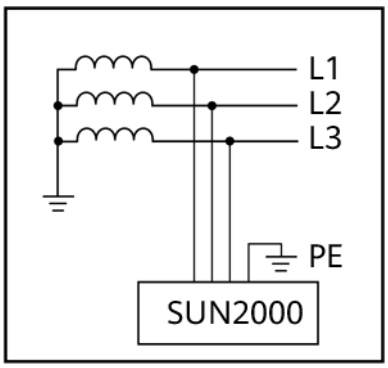

2.3 Product Appearance

2.3.1 Appearance

Front View

Figure 2-7 Front view

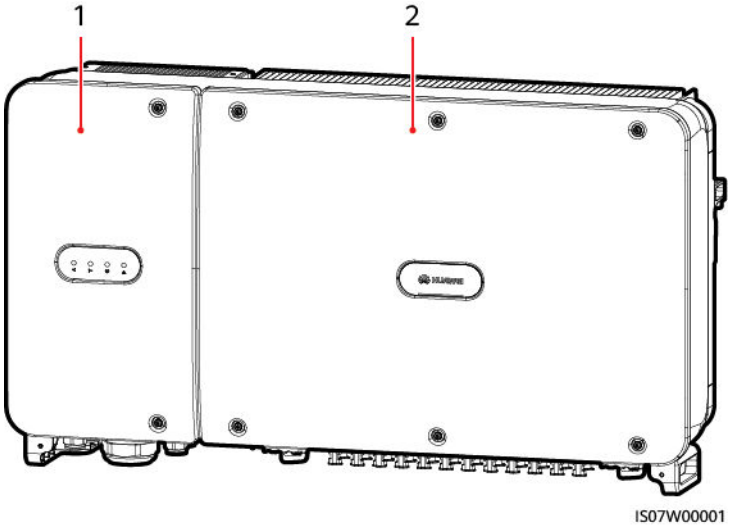

(1) Maintenance compartment door (2) Host panel

Rear View

Figure 2-8 Rear view

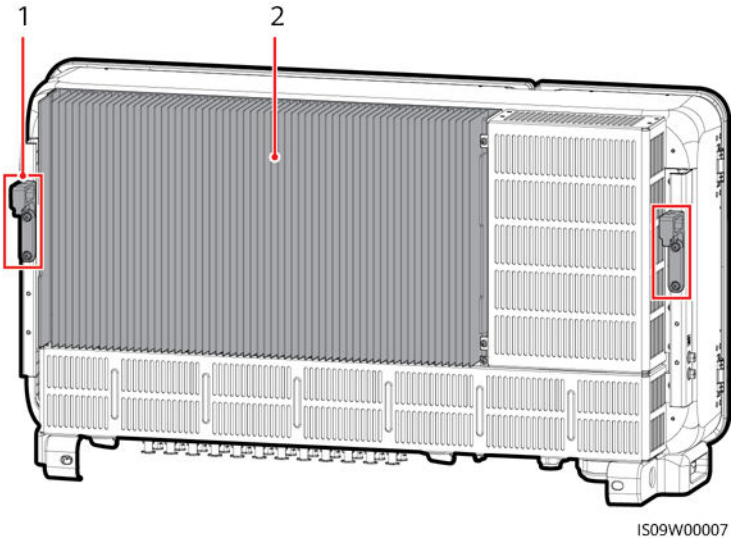

(1) Mounting plate (2) Heat sink

Bottom View

Figure 2-9 Bottom view

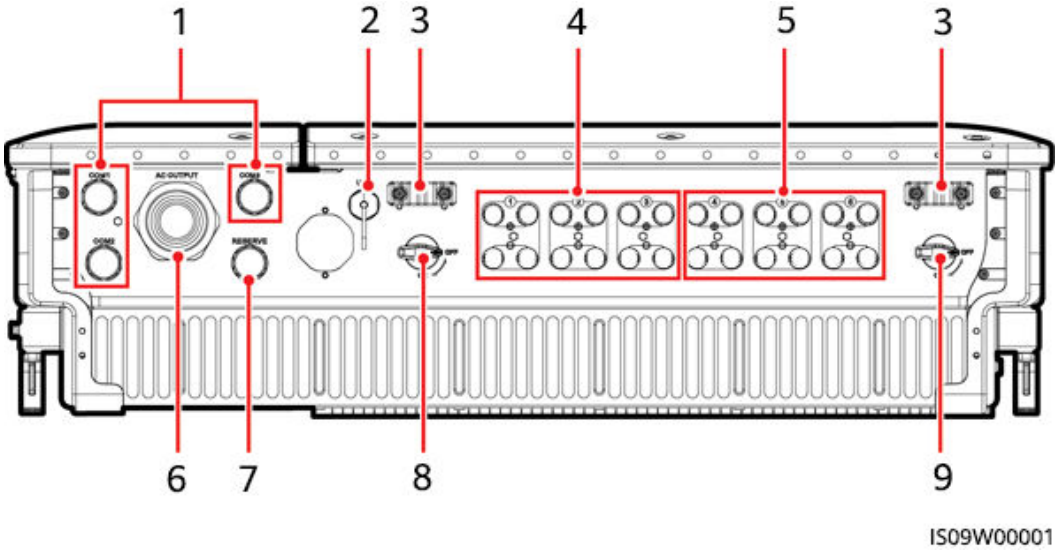

No.	Component	Silk Screen	Description
1	Cable glands	COM1, COM2, COM3	Inner diameter: 14–18 mm
2	USB port	USB	Use the USB port only during maintenance (such as power-on setting, upgrade, and data export). Ensure that the USB cover is tightened when maintenance is not performed.
3	Handler	-	-
4	DC input terminals	+/–	Controlled by DC SWITCH 1
5	DC input terminals	+/–	Controlled by DC SWITCH 2
6	Cable gland	AC OUTPUT	Inner diameter: 24–57 mm
7	Cable gland	RESERVE	Inner diameter: 14–18 mm
8	DC switch 1	DC SWITCH 1	-
9	DC switch 2	DC SWITCH 2	-

 Copyright © Huawei Technologies Co., Ltd.

Dimensions

Figure 2-10 Dimensions

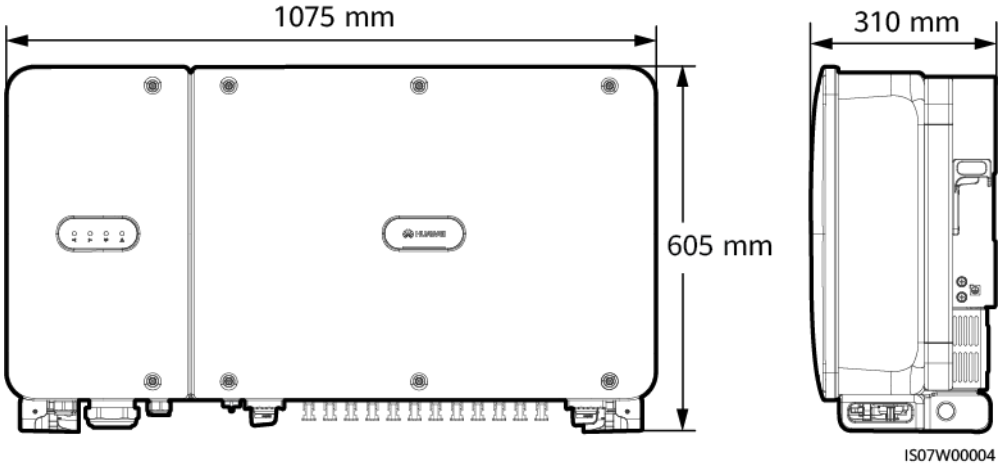

Figure 2-11 Mounting bracket dimensions

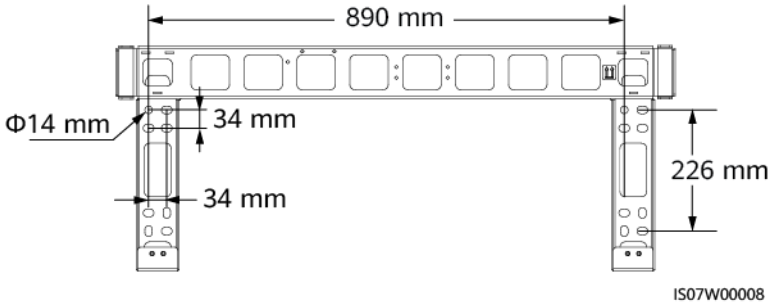

Figure 2-12 Dimensions of reserved holes on the rear

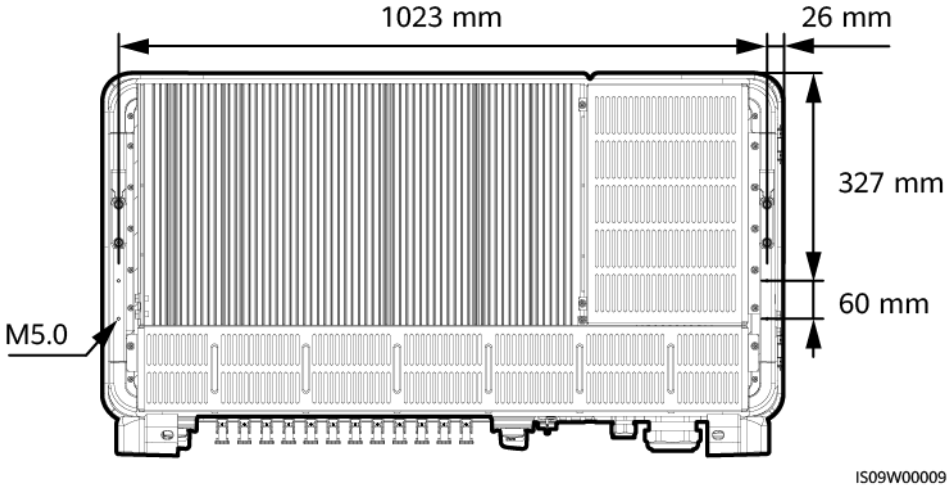

NOTE

Four M5 screw holes are reserved on the rear of the SUN2000 for installing an awning.

Wiring Area

Figure 2-13 Wiring ports (SUN2000-90KTL-H0, SUN2000-90KTL-H1, SUN2000-90KTL-H2, SUN2000-95KTL-INH0, SUN2000-95KTL-INH1, SUN2000-100KTL-H1, and SUN2000-105KTL-H1)

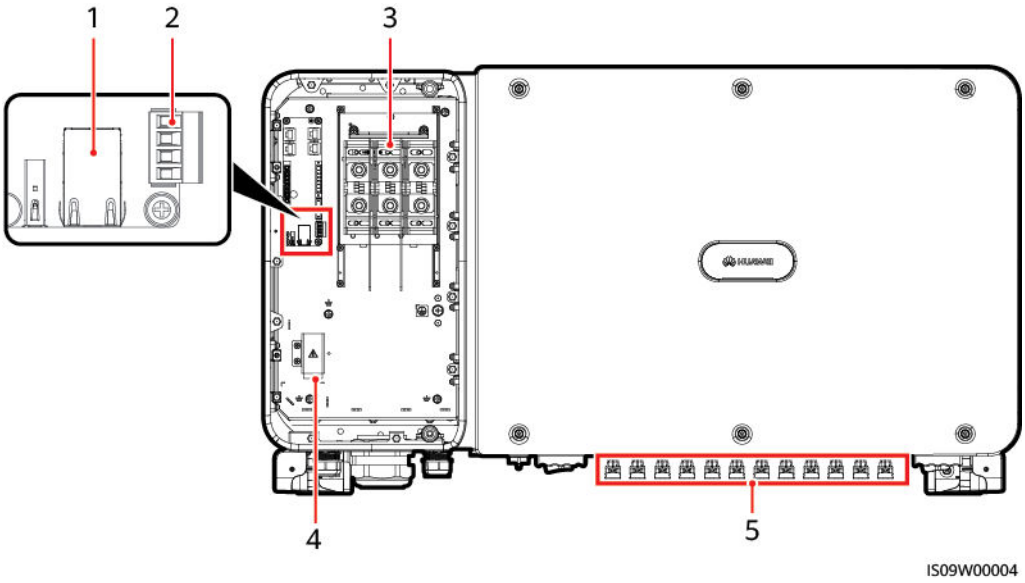

(1) RS485 port (RJ45 network port)	(2) RS485 port (terminal block)	(3) AC terminal block
(4) Power port for the tracking system	(5) DC input terminal	-

Figure 2-14 Wiring ports (SUN2000-100KTL-H0 and SUN2000-100KTL-H2)

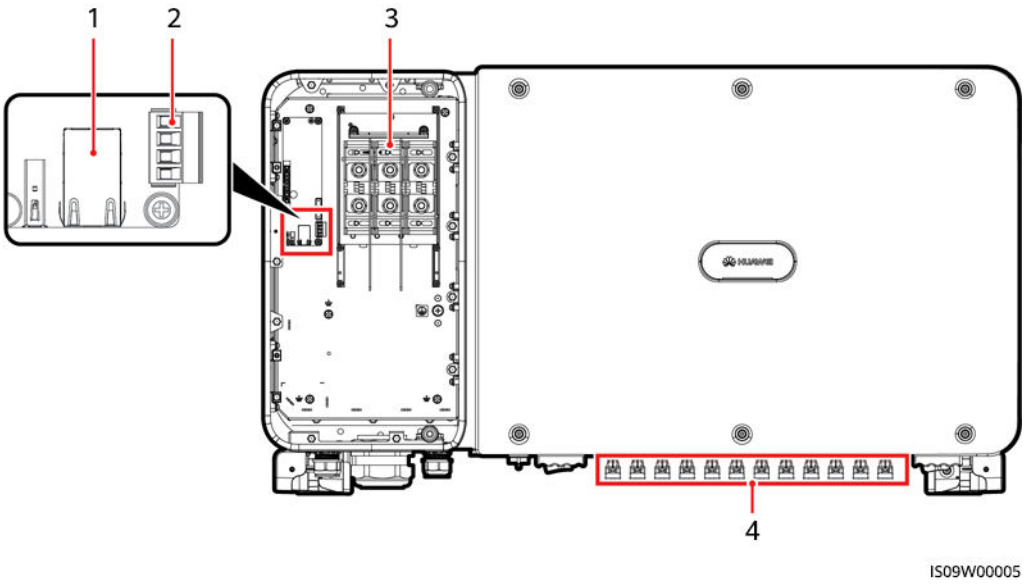

(1) RS485 port (RJ45 network port)	(2) RS485 port (terminal block)	(3) AC terminal block
(4) DC input terminal	-	-

2.3.2 Indicator Status

Figure 2-15 Indicators

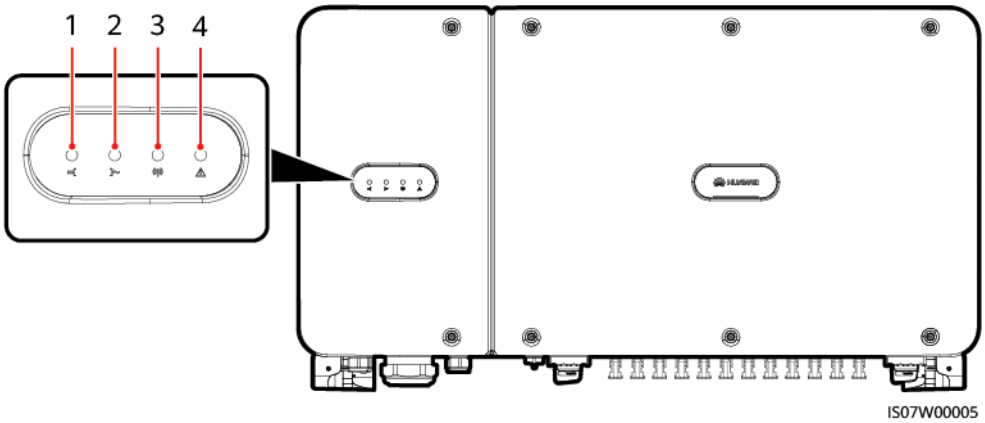

No.	Indicator	Status		Meaning
1	PV connection indicator	Steady green		At least one PV string is properly connected, and the DC input voltage of the corresponding MPPT circuit is higher than or equal to 600 V.
		Off		The SUN2000 disconnects from all PV strings, or the DC input voltage of each MPPT circuit is less than 600 V.
2	Grid-tied indicator	Steady green		The SUN2000 is in grid-tied mode.
		Off		The SUN2000 is not in grid-tied mode.
3	Communication indicator	Blinking green		The SUN2000 receives communications data normally.
		Off		The SUN2000 receives no communications data for 10s.
4	Alarm/Maintenance indicator	Alarm state	Blinking red at long intervals (on for 1s and then off for 4s)	A warning alarm is generated.
			Blinking red at short intervals (on for 0.5s and then off for 0.5s)	A minor alarm is generated.
			Steady red	A major alarm is generated.
		Local maintenance state	Blinking green at long intervals (on for 1s and then off for 1s)	Local maintenance is in progress.
			Blinking green at short intervals (on for 0.125s and then off for 0.125s)	Local maintenance fails.
			Steady green	Local maintenance succeeds.

 Copyright © Huawei Technologies Co., Ltd.

NOTE

- Local maintenance refers to operations performed after a USB flash drive, a WLAN module, a Bluetooth module, or a USB data cable is inserted into the USB port of the solar inverter. For example, local maintenance includes data import and export using a USB flash drive, and connecting to the SUN2000 app over a WLAN module, a Bluetooth module, or a USB data cable.
- If the alarming and the local maintenance happen concurrently, the alarm/maintenance indicator shows the local maintenance state first. After the USB flash drive, WLAN module, Bluetooth module, or USB data cable is removed, the indicator shows the alarm state.

2.3.3 Label Description

Label	Name	Meaning
	Running warning	Potential hazards exist after the SUN2000 is powered on. Take protective measures when operating the SUN2000.
	Burn warning	Do not touch a running SUN2000, as the shell becomes hot during operation.
	Delayed discharge	• High voltage exists after the SUN2000 is powered on. Only qualified and trained electrical technicians are allowed to perform operations on the SUN2000. • Residual voltage exists after the SUN2000 is powered off. It takes 15 minutes for the SUN2000 to discharge to the safe voltage.
	Refer to documentation	Reminds operators to refer to the documents shipped with the SUN2000.
	Grounding	Indicates the position for connecting the protective earthing (PE) cable.

 Copyright © Huawei Technologies Co., Ltd.

Label	Name	Meaning
	Operation warning	Do not remove the DC input connector when the SUN2000 is running.
	High voltage warning	High voltage exists after the SUN2000 is powered on. Read this document carefully before operating the SUN2000.
	DC terminal operation warning	High voltage exists after the SUN2000 is powered on. To avoid electric shocks, perform the following system power-off operations before plugging or unplugging DC input connectors of the SUN2000: 1. Send a shutdown command. 2. Turn off the downstream AC switch. 3. Turn off the two DC switches at the bottom.
	SUN2000 SN label	Indicates the SUN2000 serial number.
	Weight label	The SUN2000 needs to be carried by four persons or using a pallet truck.

2.4 Working Principles

2.4.1 Circuit Diagram

The SUN2000 receives inputs from 12 PV strings. The inputs are grouped into 6 MPPT circuits inside the SUN2000 to track the maximum power point of the PV strings. The DC power is then converted into three-phase AC power through an inverter circuit. Surge protection is supported on both the DC and AC sides.

 Copyright © Huawei Technologies Co., Ltd.

Figure 2-16 Conceptual diagram

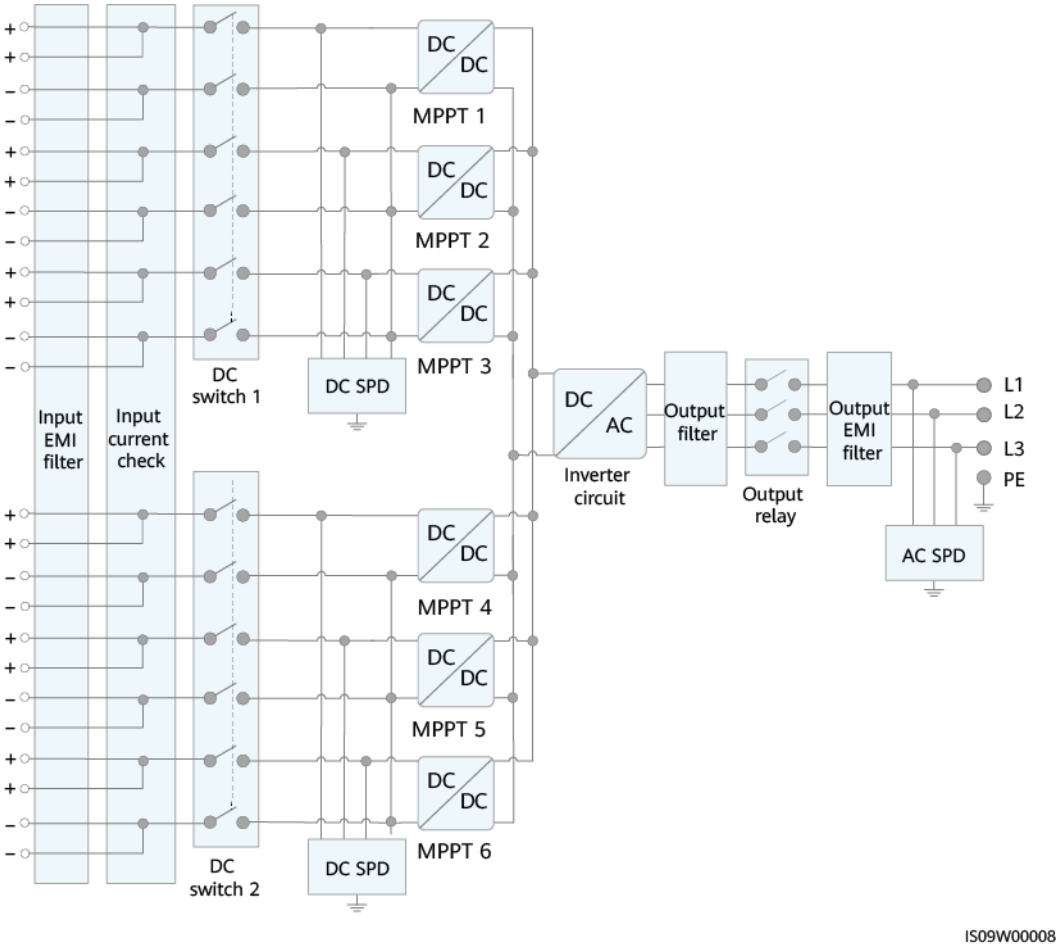

2.4.2 Working Modes

The SUN2000 can work in Standby, Operating, or Shutdown mode.

Figure 2-17 Working modes

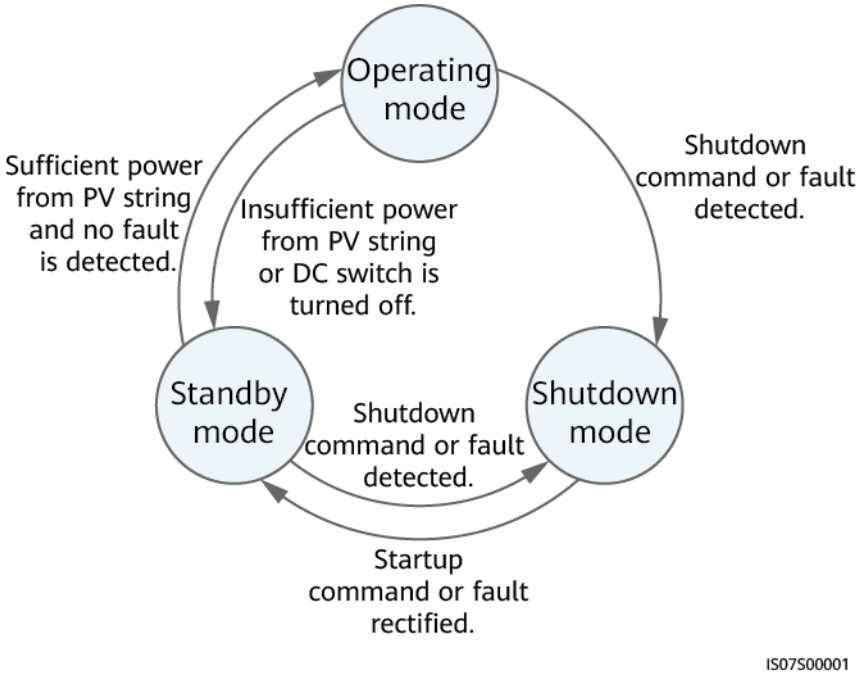

Table 2-2 Working mode description

Working Mode	Description
Standby	The SUN2000 enters Standby mode when the external environment does not meet the operating requirements. In Standby mode: ● The SUN2000 continuously performs status check and enters the Operating mode once the operating requirements are met. ● The SUN2000 enters Shutdown mode after detecting a shutdown command or a fault after startup.
Operating	In Operating mode: ● The SUN2000 converts DC power from PV strings into AC power and feeds the power to the power grid. ● The SUN2000 tracks the maximum power point to maximize the PV string output. ● If the SUN2000 detects a fault or a shutdown command, it enters the Shutdown mode. ● The SUN2000 enters Standby mode after detecting that the PV string output power is not suitable for connecting to the power grid for generating power.
Shutdown	● In Standby or Operating mode, the SUN2000 enters Shutdown mode after detecting a fault or shutdown command. ● In Shutdown mode, the SUN2000 enters Standby mode after detecting a startup command or that the fault is rectified.

 Copyright © Huawei Technologies Co., Ltd.

3 Storage

The following requirements should be met if the SUN2000 is not put into use directly:

- Do not remove the packing materials, and check the packing materials regularly (recommended: every three months). If any rodent bites are found, replace the packing materials immediately. If the solar inverter is unpacked but not put into use immediately, put it inside the original package with the desiccant bag, and seal it using tape.
- The ambient temperature and humidity should be suitable for the storage. The air must not contain corrosive or flammable gases.

Figure 3-1 Storage temperature and humidity

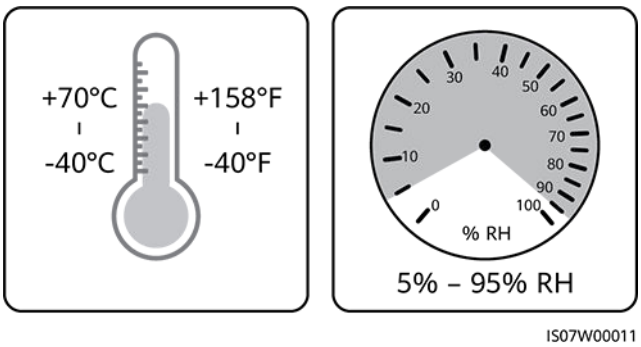

- The solar inverter should be stored in a clean and dry place and be protected from dust and water vapor corrosion. The solar inverter must be protected against rain and water.
- Do not tilt the package or place it upside down.
- To avoid personal injury or device damage, stack inverters with caution to prevent them from falling over.

 Copyright © Huawei Technologies Co., Ltd.

Figure 3-2 Maximum number of pile-up layers allowed

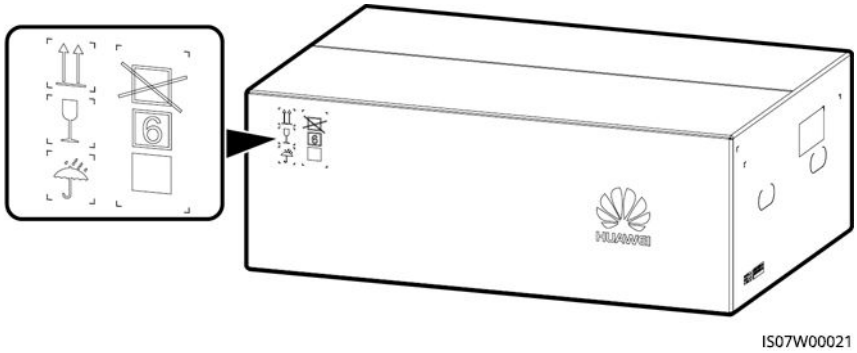

- If the solar inverter has been stored for more than two years, it must be checked and tested by professionals before being put into use.

4 Installation

4.1 Checking Before Installation

Outer Packing Materials

Before unpacking the inverter, check the outer packing materials for damage, such as holes and cracks, and check the inverter model. If any damage is found or the inverter model is not what you requested, do not unpack the package and contact your supplier as soon as possible.

Figure 4-1 Position of the inverter model label

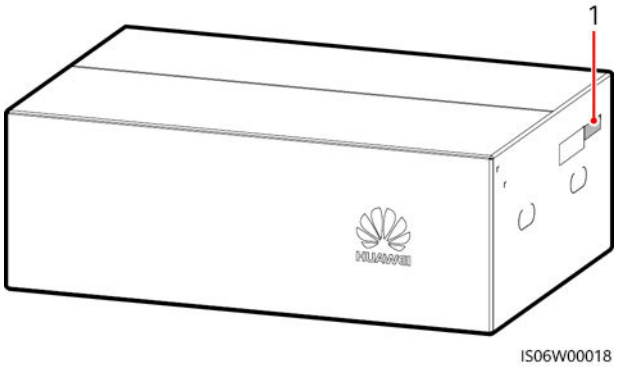

(1) Position of the model label

NOTE

You are advised to remove the packing materials within 24 hours before installing the inverter.

Package Contents

After unpacking the inverter, check that the contents are intact and complete. If any damage is found or any component is missing, contact your supplier.

NOTE

For details about the number of contents, see the *Packing List* in the packing case.

4.2 Tool Preparation

Category	Tool			
Installation	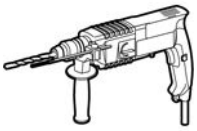 Hammer drill (with Φ14 mm and Φ16 mm drill bits)	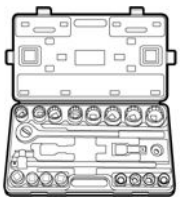 Socket wrench set	Torque wrench	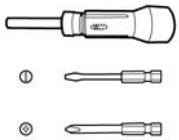 Torque screwdriver (Phillips head: M4; flat head: M4)
	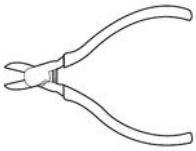 Diagonal pliers	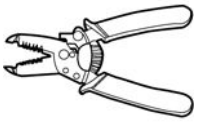 Wire stripper	Flat-head screwdriver (head: 0.6 mm x 3.5 mm)	Rubber mallet
	Utility knife	Cable cutter	Crimping tool (model: UTXTC0003; manufacturer: Amphenol)	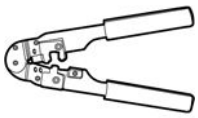 RJ45 crimping tool

 Copyright © Huawei Technologies Co., Ltd.

Category	Tool			
	Removal wrench (model: UTXTWA001; manufacturer: Amphenol)	Vacuum cleaner	Multimeter (DC voltage measurement range ≥ 1500 V DC)	Marker
	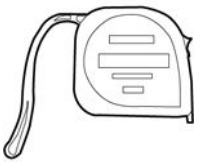 Measuring tape	Bubble or digital level	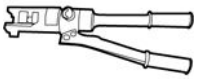 Hydraulic pliers	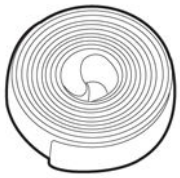 Heat shrink tubing
	Heat gun	Cable tie	Crimping tool Model: 32.6020-22100-HZ; manufacturer: Staubli	Removal wrench Model: 13001462; manufacturer: Staubli
PPE	Safety gloves	Safety goggles	Anti-dust respirator	Safety shoes

4.3 Determining the Installation Position

Installation Environment Requirements

- Do not install the inverter in working or living areas.

- If the device is installed in public places (such as parking lots, stations, and factories) other than working and living areas, install a protective net outside the device, set up a safety warning sign to isolate the device, and prevent unauthorized personnel from approaching the inverter. This is to avoid personal injury or property loss caused by accidental contact or other reasons during device operation.
- Do not install the inverter in areas with flammable materials.
- Do not install the inverter in areas with explosive materials.
- Do not install the inverter in areas with corrosive materials.
- Do not install the inverter where its enclosure and heat sinks are easily accessible, because the voltage is high and these parts are hot during operation.
- Install the inverter in a well-ventilated environment for heat dissipation
- If the inverter is installed in an airtight environment, a heat dissipation device or ventilation device must be installed to ensure that the indoor ambient temperature is not higher than the external ambient temperature during operation.
- You are advised to install the inverter in a sheltered place or install an awning over it.
- The inverter will be corroded in salt areas. Before installing the inverter outdoors in salt areas, consult Huawei. A salt area refers to the region within 500 meters from the coast or prone to sea breeze. The regions prone to sea breeze vary with weather conditions (such as typhoons and monsoons) or terrains (such as dams and hills).

Mounting Structure Requirements

- The mounting structure where the SUN2000 is installed must be fire resistant. Do not install the SUN2000 on flammable building materials.
- Ensure that the installation surface is solid enough to bear the weight load.
- In residential areas, do not install the SUN2000 on drywalls or walls made of similar materials with a weak sound insulation performance because the noise generated by the SUN2000 is noticeable.

Figure 4-2 Mounting structure

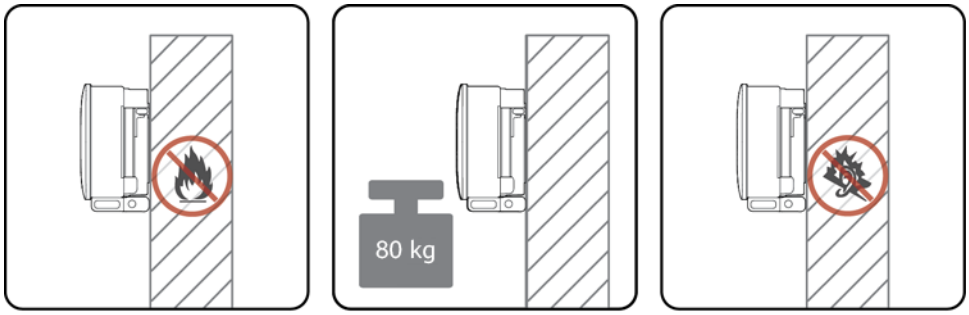

IS07W000029

Installation Angle Requirements

The SUN2000 can be support-mounted or wall-mounted. The installation angle requirements are as follows:

- Install the SUN2000 vertically or at a maximum back tilt of 15 degrees to facilitate heat dissipation.
- Do not install the SUN2000 at forward tilted, excessive back tilted, side tilted, horizontal, or upside down positions.

Figure 4-3 Installation tilts

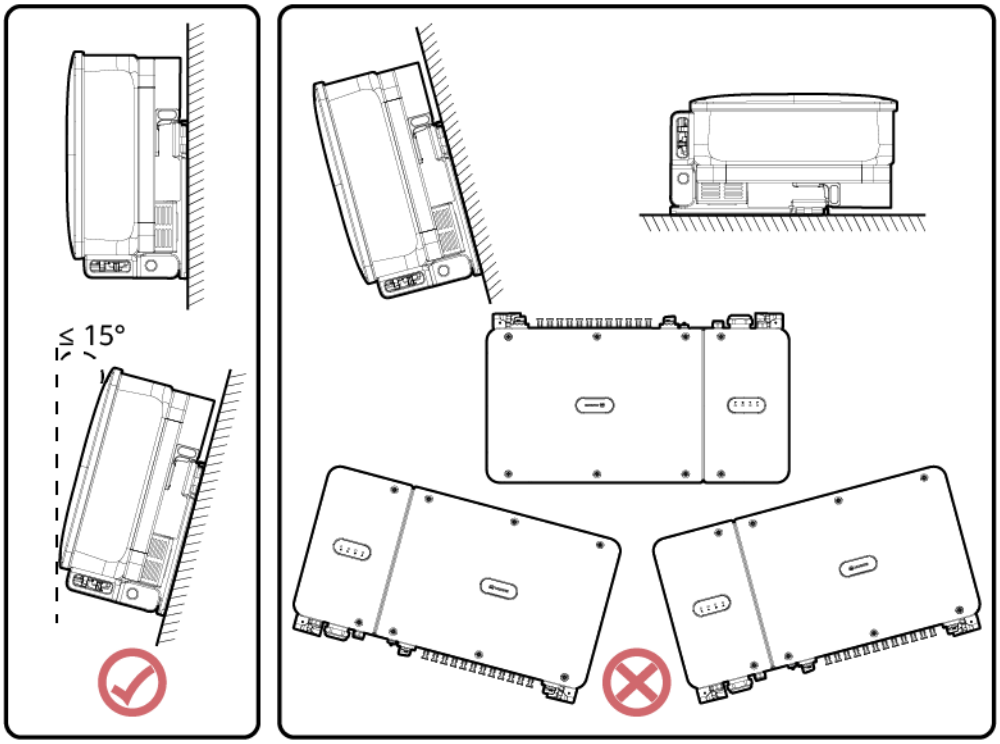

Installation Space Requirements

Reserve enough space around the SUN2000 for installation and heat dissipation.

Figure 4-4 Installation space

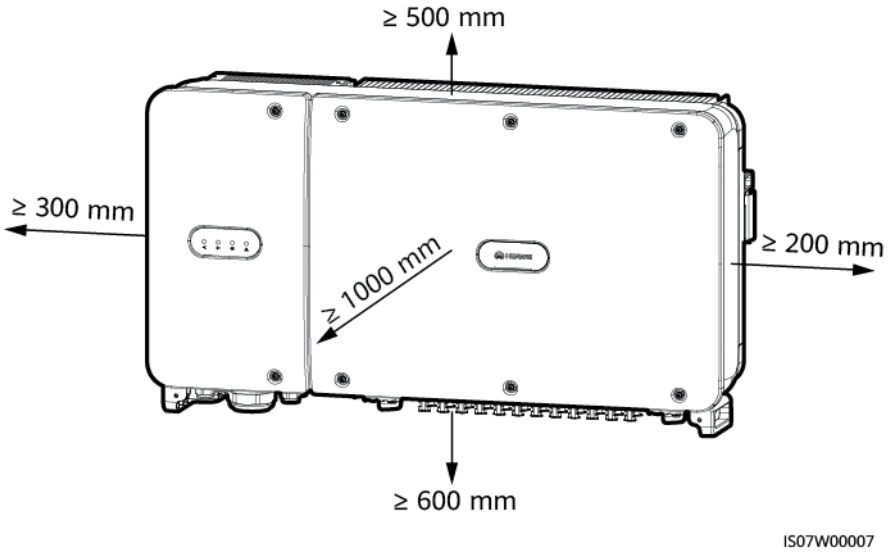

NOTE

For ease of installing the SUN2000 on the mounting bracket, connecting cables to the bottom of the SUN2000, and maintaining the SUN2000 in future, it is recommended that the bottom space be from 600 mm to 730 mm. If you have any question about the distance, consult the local technical support engineers.

When installing multiple SUN2000s, install them in horizontal mode if sufficient space is available and install them in staggered mode if no sufficient space is available. Stacked installation is not recommended.

Figure 4-5 Horizontal installation mode (recommended)

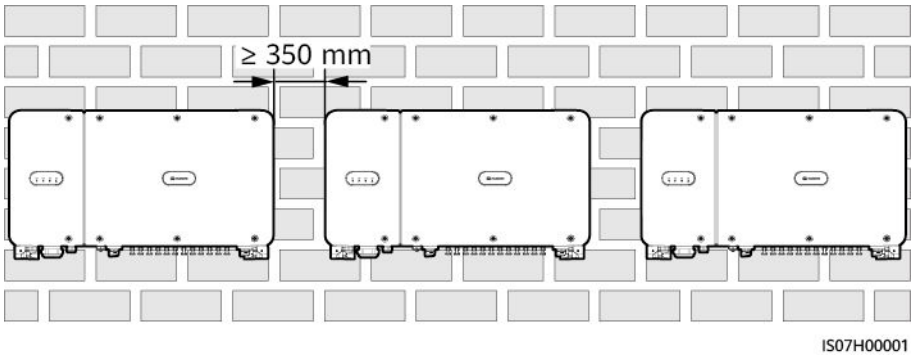

Figure 4-6 Staggered installation mode (recommended)

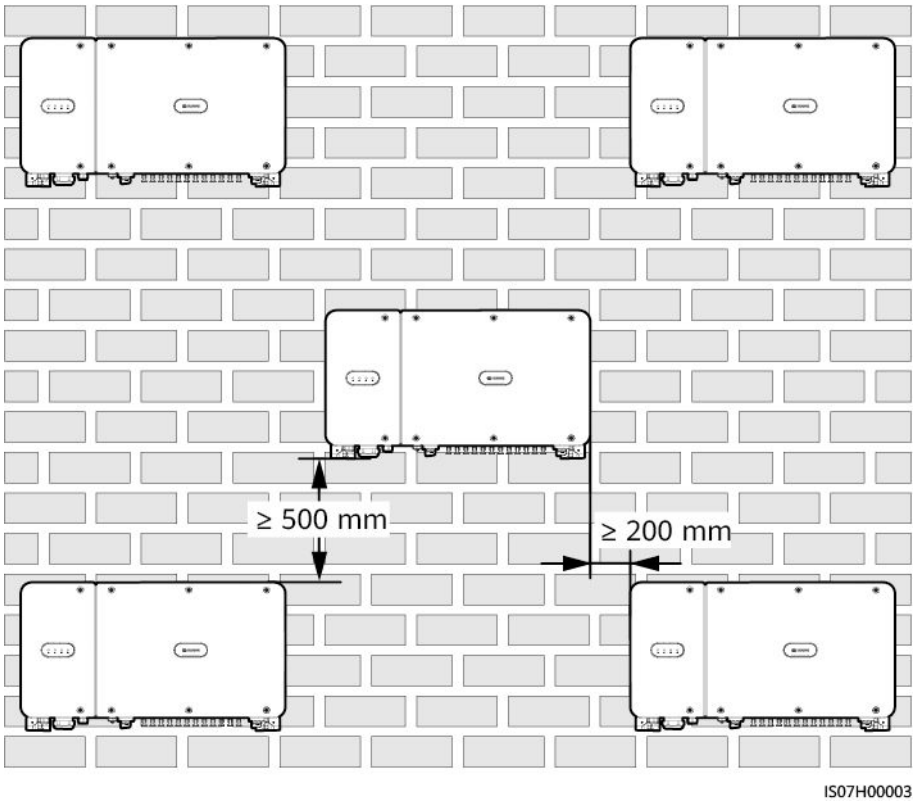

Figure 4-7 Stacked installation mode (not recommended)

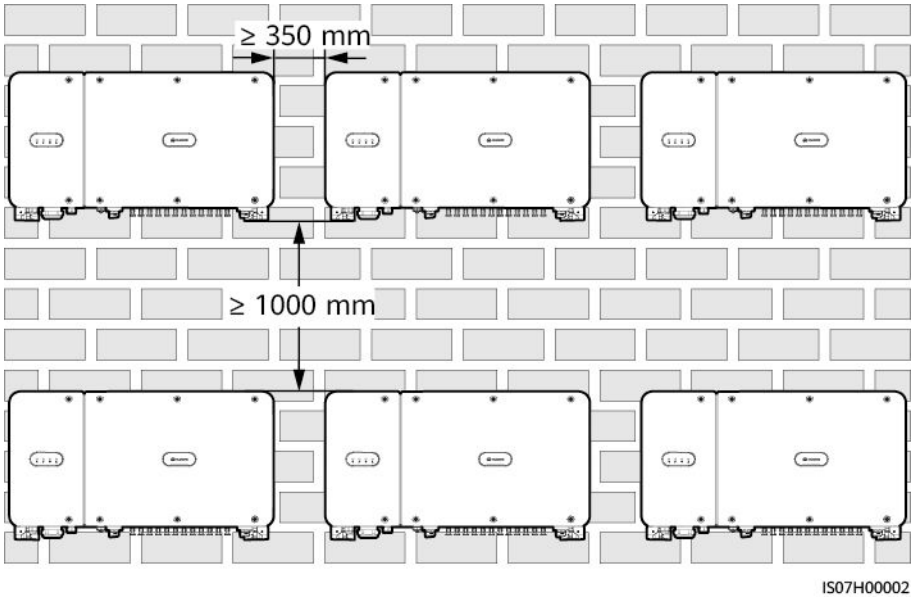

4.4 Installing the Mounting Bracket

Before installing the mounting bracket, remove the security Torx wrench and save it for later use.

Figure 4-8 Position for binding the security Torx wrench

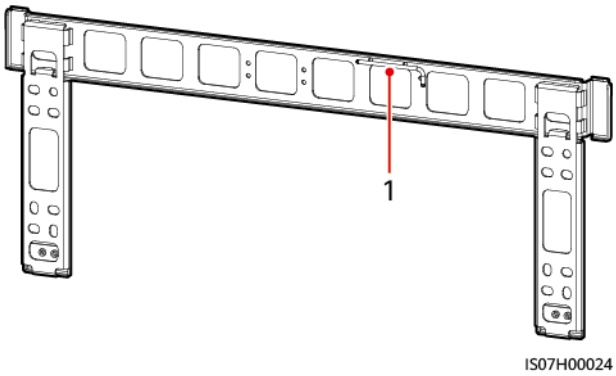

(1) Position for binding the security Torx wrench

The SUN2000 mounting bracket has four groups of screw holes, each group containing four holes. Mark any one hole in each group based on site requirements and mark four holes in total. The two round holes are recommended.

Figure 4-9 Hole dimensions

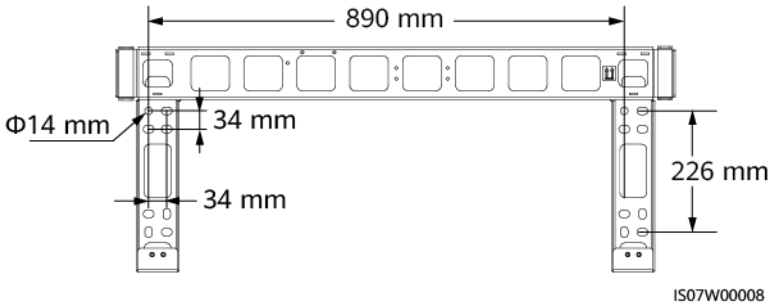

4.4.1 Support-Mounted Installation

Prerequisites

The M12x40 bolt assemblies are delivered with the mounting bracket. If the bolt assembly length does not meet the installation requirements, prepare M12 bolt assemblies by yourself and use them together with the delivered M12 nuts.

Procedure

Step 1 Determine the positions for drilling holes using the mounting bracket. Level the positions of mounting holes using a bubble or digital level, and mark the positions with a marker.

Step 2 Drill holes using a hammer drill. You are advised to apply anti-rust paint on the hole positions for protection.

Step 3 Secure the mounting bracket.

 Copyright © Huawei Technologies Co., Ltd.

Figure 4-10 Installing the mounting bracket

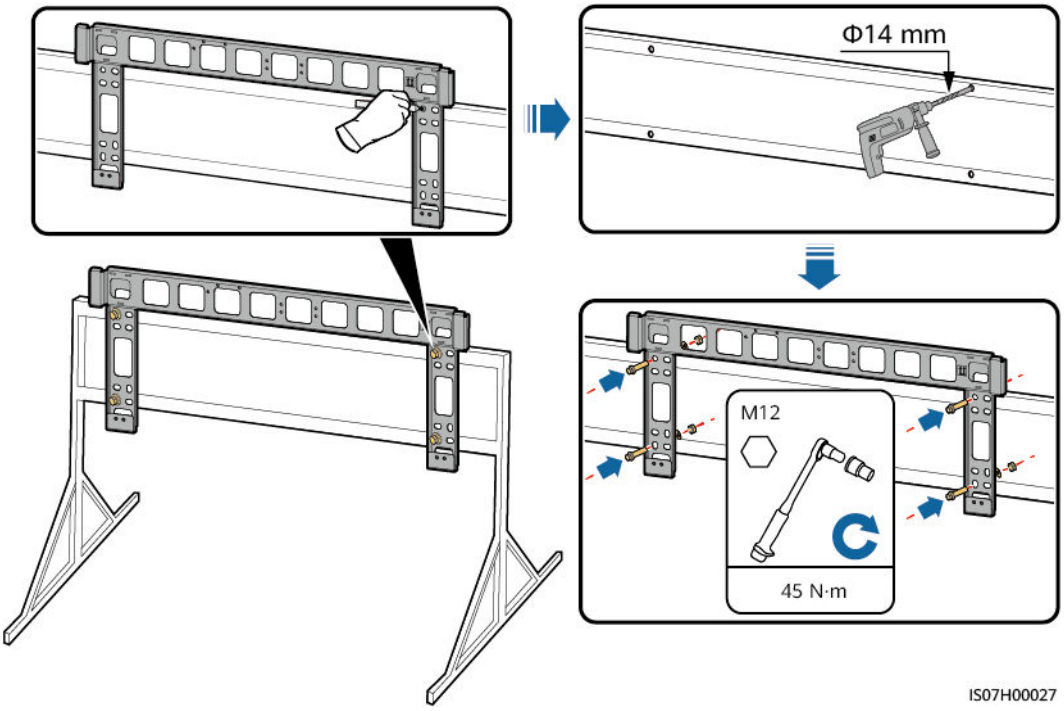

----End

4.4.2 Wall-Mounted Installation

Prerequisites

You have prepared the expansion bolts. M12x60 stainless expansion bolts are recommended.

Procedure

Step 1 Determine the positions for drilling holes using the mounting bracket. Level the positions of mounting holes using a bubble or digital level, and mark the positions with a marker.

Step 2 Drill holes using a hammer drill and install expansion bolts.

WARNING

Avoid drilling holes in the water pipes and power cables buried in the wall.

 Copyright © Huawei Technologies Co., Ltd.

NOTICE

- To prevent dust inhalation or contact with eyes, wear an anti-dust respirator and safety goggles when drilling holes.
- Clean up any dust in and around the holes using a vacuum cleaner and measure the distance between holes. If the holes are inaccurately positioned, drill a new set of holes.
- Level the head of the expansion sleeve with the concrete wall after removing the bolt, spring washer, and flat washer. Otherwise, the mounting bracket will not be securely installed on the concrete wall.

Step 3 Secure the mounting bracket.

Figure 4-11 Installing the mounting bracket

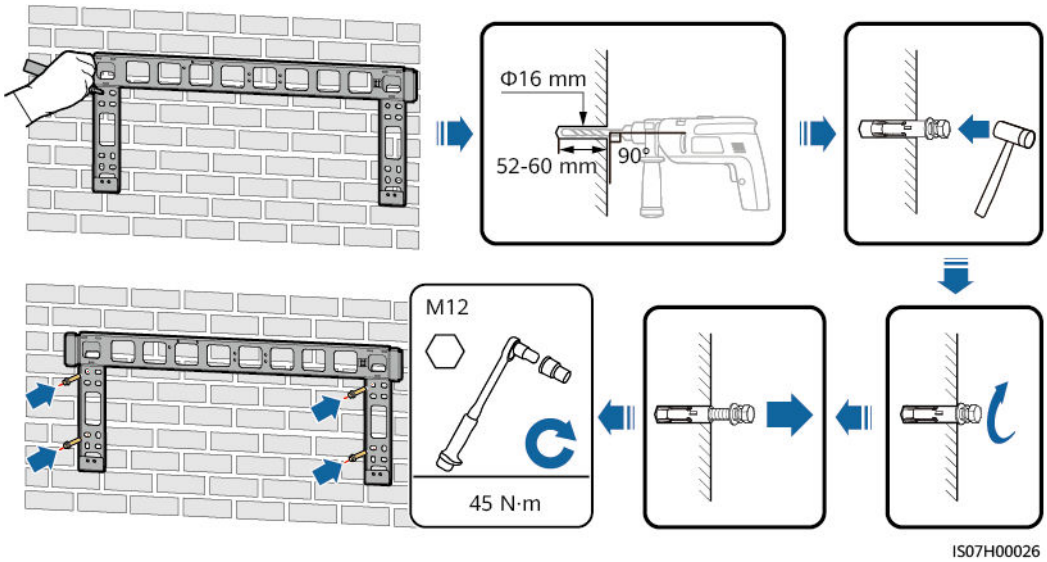

----End

4.5 Installing the SUN2000

Context

NOTICE

- Handle the SUN2000 with care when moving it to prevent device damage and personal injury.
- It takes multiple persons or a pallet truck to move the SUN2000.
- Do not place the SUN2000 with its wiring terminals at the bottom contacting the floor or any other objects because the terminals are not designed to bear the weight of the SUN2000.
- When you need to temporally place the SUN2000 on the ground, use foam, paper, or other protection material to prevent damage to its cover.

 Copyright © Huawei Technologies Co., Ltd.

Procedure

Step 1 Lift the SUN2000 from the packing case and move it to the installation position.

Figure 4-12 Taking out the SUN2000

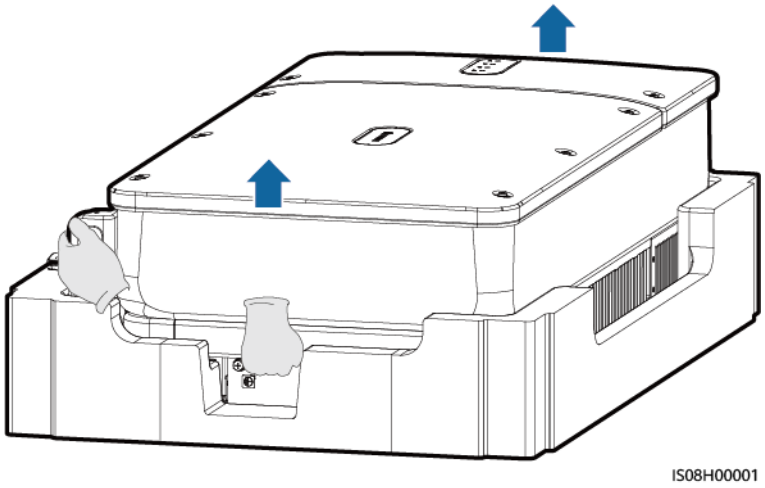

Step 2 For the SUN2000-90KTL-H2 used in Australia, install the delivered screw for locking each DC switch.

Figure 4-13 Installing screws

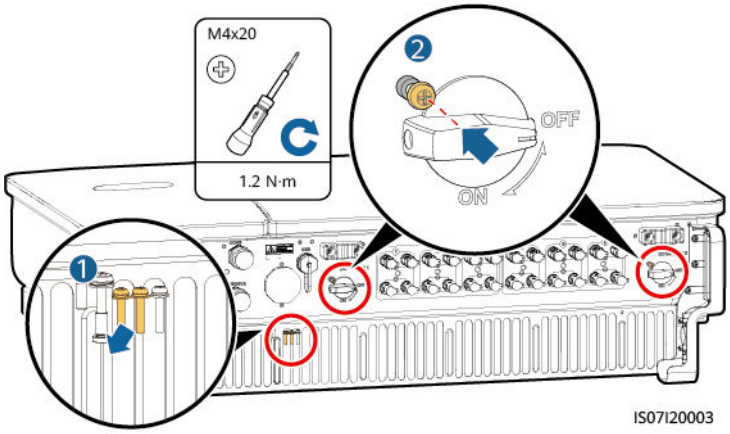

Step 3 Lift the SUN2000 and keep it upright.

Figure 4-14 Lifting the SUN2000 and keeping it upright

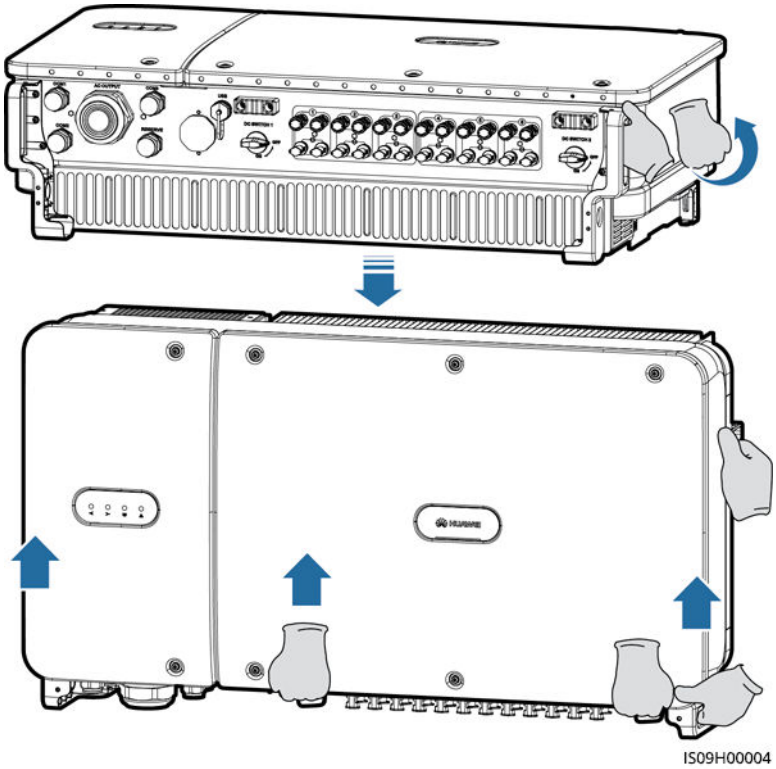

Step 4 If the installation position is too high to install the SUN2000 on the mounting bracket, run a rope that is strong enough to bear the SUN2000 through the two lifting eyes, and hoist the SUN2000.

NOTICE

Hoist the SUN2000 with care to protect it from colliding with the wall or other objects.

Figure 4-15 Hoisting the SUN2000

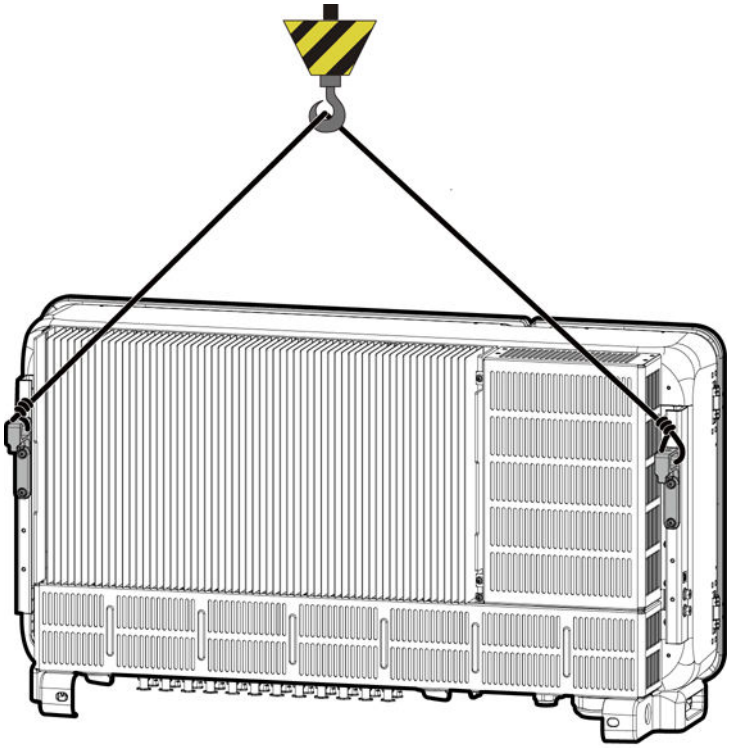

Step 5 Install the SUN2000 on the mounting bracket and align the SUN2000 enclosure with the mounting bracket.

Figure 4-16 Mounting the SUN2000

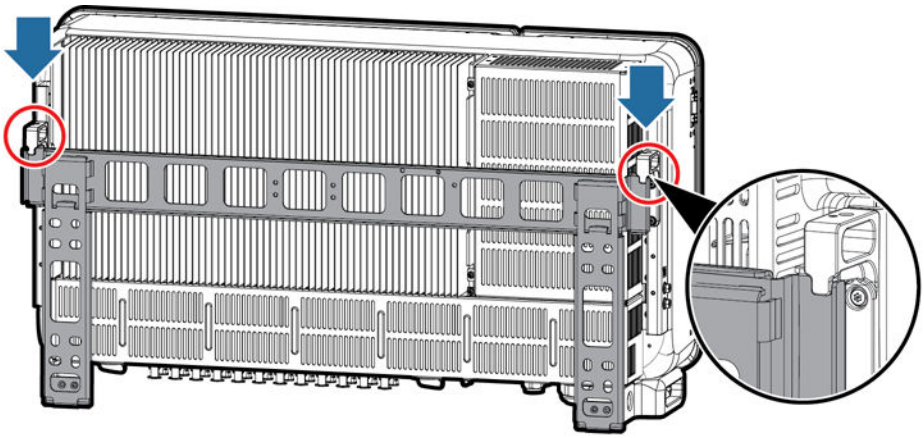

Step 6 Secure the SUN2000.

Figure 4-17 Tightening security Torx screws

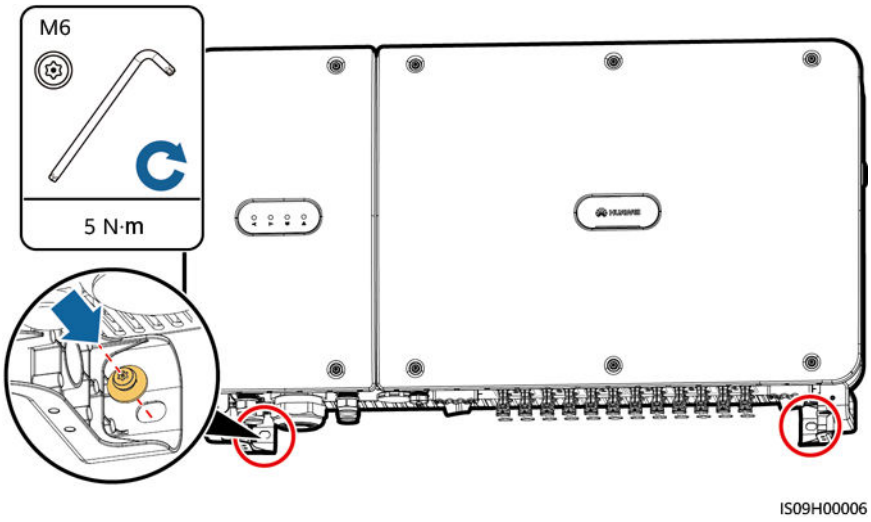

----End

5 Electrical Connections

5.1 Precautions

DANGER

When exposed to sunlight, the PV arrays supply DC voltage to the SUN2000. Before connecting cables, ensure that the two DC switches on the SUN2000 are OFF. Otherwise, the high voltage of the SUN2000 may result in electric shocks.

WARNING

- The equipment damage caused by incorrect cable connections is beyond the warranty scope.
- Only certified electrician can perform electrical terminations.
- Wear proper PPE at all time when terminating cables.
- To prevent poor cable connection due to overstress, it is recommended that the cables be bent and reserved, and then connected to the appropriate ports.

NOTE

The cable colors shown in the electrical connection diagrams provided in this chapter are for reference only. Select cables in accordance with local cable specifications (green-and-yellow cables are only used for grounding).

5.2 Preparing Cables

The SUN2000 supports MBUS and RS485 communication modes.

 Copyright © Huawei Technologies Co., Ltd.

5.2.1 MBUS Communication

If MBUS is selected, no RS485 communications cable is required to connect to the SUN2000, but the AC power cable needs to connect to a SmartLogger that supports MBUS.

NOTICE

The MBUS communication mode is only applicable to medium-voltage grid connection scenarios and non-low-voltage public grid connection scenarios (industrial environment).

Figure 5-1 Network Application

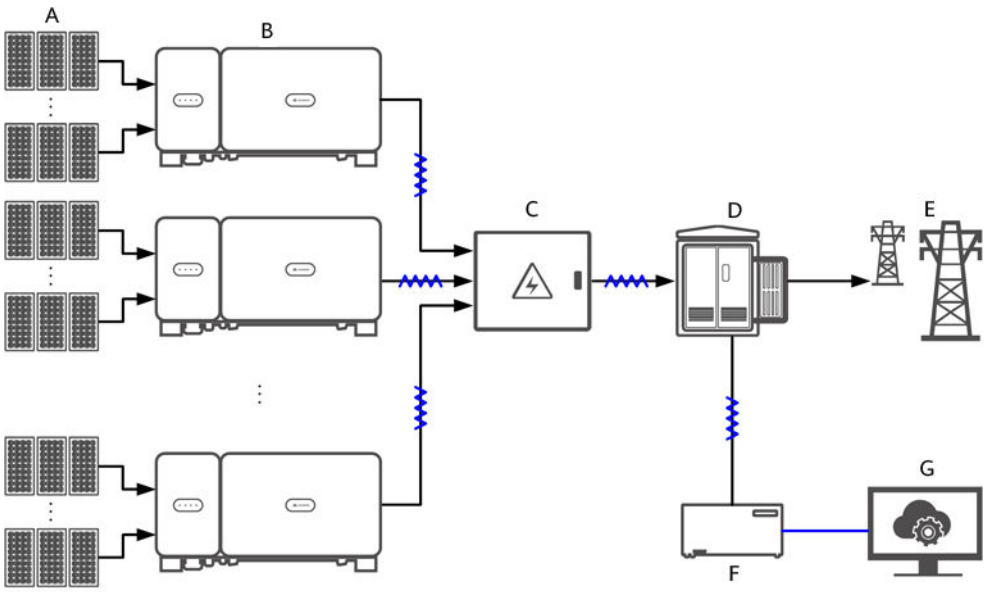

NOTE

— indicates a power cable; → indicates the power flow direction; — indicates a signal cable; ⩘ indicates the signal flow.

(A) PV string (B) SUN2000 (C) AC combiner box

(D) Step-up transformer (E) Power grid (F) SmartLogger

(G) Management system

Figure 5-2 SUN2000 cable connections (dashed box indicating optional components)

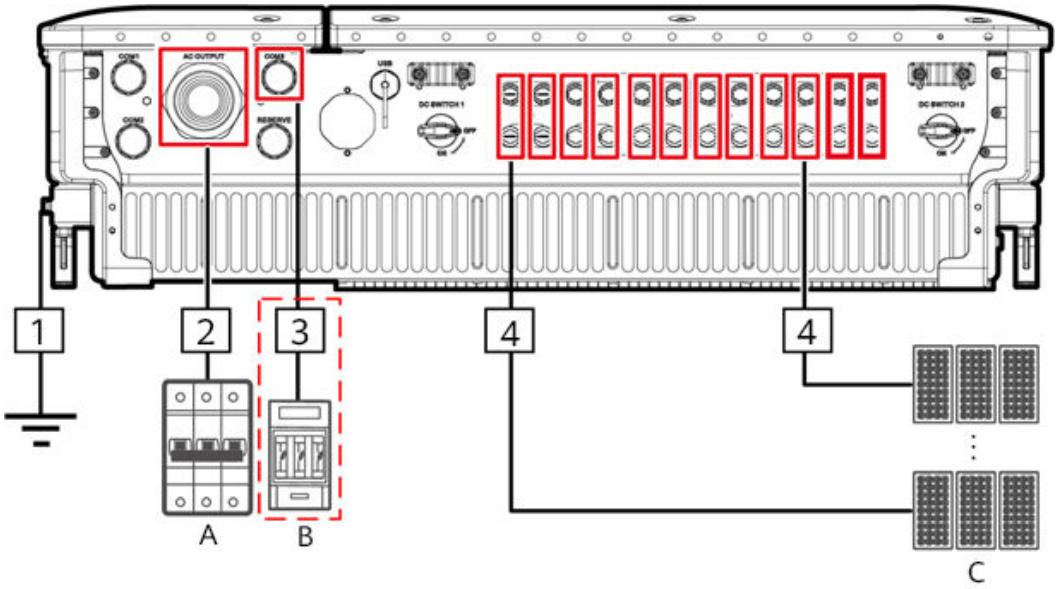

Table 5-1 Component description

No.	Component	Remarks	Source
A	AC switch	• Installed in the AC combiner box • It is recommended that a three-phase AC circuit breaker with a rated voltage greater than or equal to 800 V AC and a rated current of 125 A be configured for the SUN2000-105KTL-H1. • It is recommended that a three-phase AC circuit breaker with a rated voltage greater than or equal to 800 V AC and a rated current of 100 A be configured for other models.	Prepared by the customer

 Copyright © Huawei Technologies Co., Ltd.

No.	Component	Remarks	Source
B	Fuse/Circuit breaker	The tracking system should be equipped with an overcurrent protective device/component. The power cable between the device/component and wiring terminal should be no longer than 2.5 m. Therefore, a fuse or circuit breaker is recommended. ● Installed between the SUN2000 and tracking control box ● Fuse specifications: rated voltage ≥ 800 V; rated current: 6 A; protection: gG ● Circuit breaker specifications: rated voltage ≥ 800 V; rated current: 6 A; tripping: C	Prepared by the customer
C	PV string	● A PV string is composed of PV modules connected in series. ● The SUN2000 supports the input from 12 PV strings.	Prepared by the customer

NOTICE

The SUN2000 has an RCMU inside. Its external AC switch should be a three-phase circuit breaker or other AC load circuit breakers to safely disconnect the SUN2000 from the power grid.

Table 5-2 Cable description

No.	Cable	Type	Conductor Cross-Sectional Area Range	Outer Diameter	Source
1	PE cable	Single-core outdoor copper cable and M8 OT/DT terminal **NOTICE** Preferred to connect to the PE point on the enclosure. The PE point in the maintenance compartment is used for connecting to the PE cable included in the multi-core AC power cable.	≥ 16 mm^2. For details, see **Table 5-3**.	-	Prepared by the customer

 Copyright © Huawei Technologies Co., Ltd.

No.	Cable		Type	Conductor Cross-Sectional Area Range	Outer Diameter	Source
2	AC output power cable[a]		• If you connect a ground cable to the ground point on the chassis shell, you are advised to use a three-core (L1, L2, and L3) outdoor cable and M10 OT/DT terminals (L1, L2, and L3). • If you connect a ground cable to the ground point in the maintenance compartment, you are advised to use a four-core (L1, L2, L3, and PE) outdoor cable, M10 OT/DT terminals (L1, L2, and L3), and M8 OT/DT terminals (PE). You do not need to separately prepare a PE cable.	• Copper-core cable: – L1, L2, L3: 25–95 mm^2 – PE: ≥ 16 mm^2. For details, see **Table 5-3**. • Aluminum alloy cable or copper-clad aluminum cable: – L1, L2, L3: 35–95mm^2 – PE: ≥ 16 mm^2. For details, see **Table 5-3**.	24–57 mm	Prepared by the customer
3	Tracking system power cable		Three-core outdoor copper cable with dual-layer protection	6 mm^2	14–18 mm	Prepared by the customer
4	DC input power cable	Amphenol UTX PV Connectors	PV cable that meets the 1500 V standard	4–6 mm^2 (12–10 AWG)	4.5–7.8 mm	Prepared by the customer
		MC4 EVO2 PV Connectors		4–6 mm^2 (12–10 AWG)	4.7–6.4 mm	Prepared by the customer

 Copyright © Huawei Technologies Co., Ltd.

No.	Cable	Type	Conductor Cross-Sectional Area Range	Outer Diameter	Source
Note a: When the MBUS is used for communication, it is recommended that the multi-wire cable be used. The maximum communication distance is 1000 m. If other types of AC power cables are used, contact Huawei technical support.					

Table 5-3 PE cable specifications

Conductor Cross-Sectional Area S of the AC Power Cable (mm^2)	Conductor Cross-Sectional Area S_P of the PE Cable (mm^2)
$16 < S \leq 35$	$S_P \geq 16$
$35 < S$	$S_P \geq S/2$
• The specifications are valid only if the conductors of the PE cable and AC power cable use the same material. If the materials are different, ensure that the conductor cross-sectional area of the PE cable produces a conductance equivalent to that of the cable specified in the table. • The specifications of the PE cable are subject to this table or calculated according to IEC 60364-5-54.	

5.2.2 RS485 Communication

If RS485 is selected, connect an RS485 communications cable to the SUN2000, but the AC power cable does not need to connect to a SmartLogger that supports MBUS.

Figure 5-3 Network Application

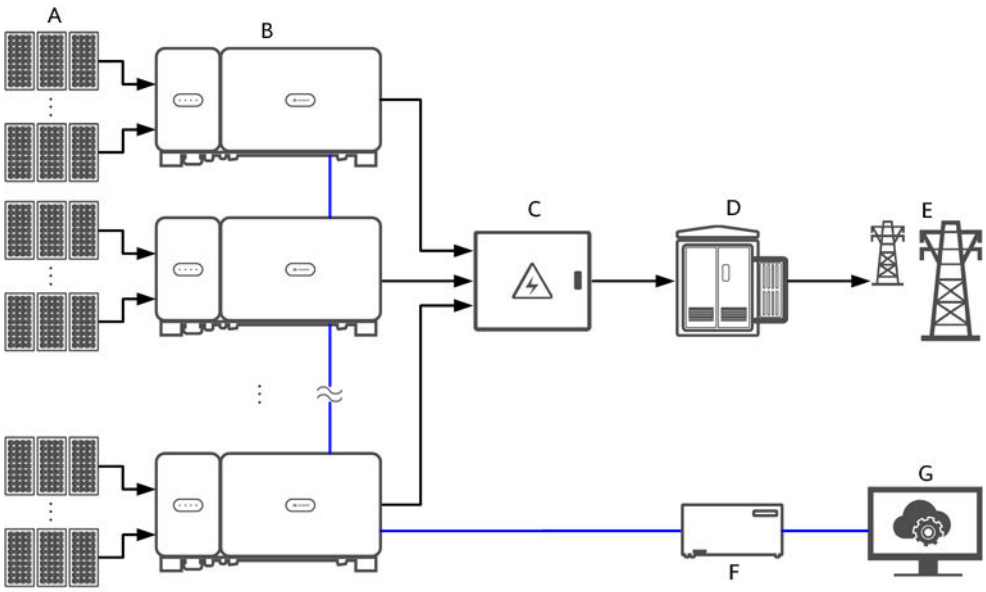

NOTE

— indicates a power cable; → indicates the power flow direction; — indicates a signal cable.

(A) PV string	(B) SUN2000	(C) AC combiner box
(D) Step-up transformer	(E) Power grid	(F) SmartLogger
(G) Management system	-	-

NOTICE

- To ensure the system response speed, you are advised to connect less than 30 cascading SUN2000s on each COM port of the SmartLogger.
- The RS485 communication distance between the SUN2000 at the end and the SmartLogger cannot exceed 1000 m.

Figure 5-4 SUN2000 cable connections (dashed box indicating optional components)

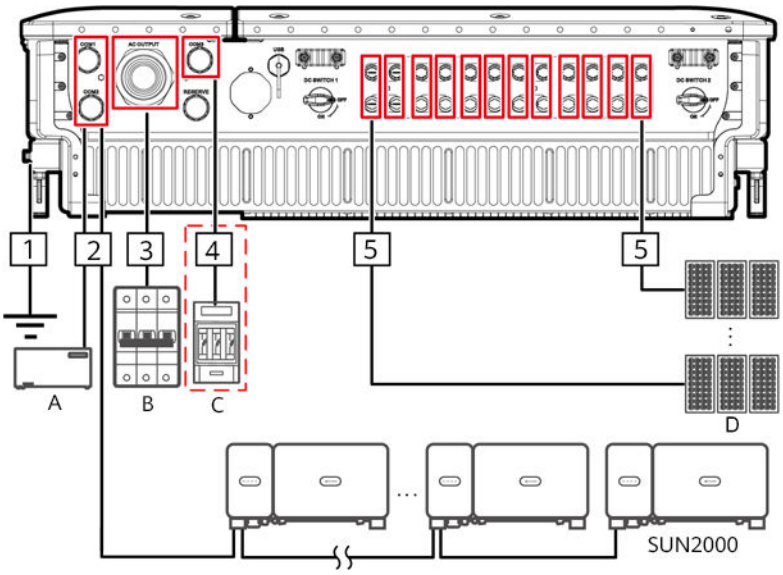

Table 5-4 Component description

No.	Component	Remarks	Source
A	SmartLogger	The SUN2000 can connect to the SmartLogger to implement RS485 communication.	Can be purchased from Huawei

No.	Component	Remarks	Source
B	AC switch	• Installed in the AC combiner box • It is recommended that a three-phase AC circuit breaker with a rated voltage greater than or equal to 800 V AC and a rated current of 125 A be configured for the SUN2000-105KTL-H1. • It is recommended that a three-phase AC circuit breaker with a rated voltage greater than or equal to 800 V AC and a rated current of 100 A be configured for other models.	Prepared by the customer
C	Fuse/Circuit breaker	The tracking system should be equipped with an overcurrent protective device/component. The power cable between the device/component and wiring terminal should be no longer than 2.5 m. Therefore, a fuse or circuit breaker is recommended. • Installed between the SUN2000 and tracking control box • Fuse specifications: rated voltage ≥ 800 V; rated current: 6 A; protection: gG • Circuit breaker specifications: rated voltage ≥ 800 V; rated current: 6 A; tripping: C	Prepared by the customer
D	PV string	• A PV string is composed of PV modules connected in series. • The SUN2000 supports the input from 12 PV strings.	Prepared by the customer

NOTICE

The SUN2000 has a residual current monitoring unit (RCMU) inside. Its external AC switch should be a three-phase circuit breaker or other AC load circuit breakers to safely disconnect the SUN2000 from the power grid.

 Copyright © Huawei Technologies Co., Ltd.

Table 5-5 Cable description

No.	Cable	Type	Conductor Cross-Sectional Area Range	Outer Diameter	Source
1	PE cable	Single-core outdoor copper cable and M8 OT/DT terminal **NOTICE** Preferred to connect to the PE point on the enclosure. The PE point in the maintenance compartment is used for connecting to the PE cable included in the multi-core AC power cable.	≥ 16 mm^2. For details, see **Table 5-6**.	-	Prepared by the customer
2	RS485 communications cable (connected to a terminal block; recommended)	Recommended: a multi-paired, individually foil shielded cable that complies with local standards and M6 OT terminals	0.25–2 mm^2	14–18 mm	Prepared by the customer
	RS485 communications cable (connected to a network port)	Recommended: a CAT 5E outdoor shielded network cable with the internal resistance ≤ 1.5 ohms/10 m (1.5 ohms/393.70 in.), as well as a shielded RJ45 connector	-	7–9 mm	Prepared by the customer

 Copyright © Huawei Technologies Co., Ltd.

No.	Cable		Type	Conductor Cross-Sectional Area Range	Outer Diameter	Source
3	AC output power cable		• If you connect a ground cable to the ground point on the chassis shell, you are advised to use a three-core (L1, L2, and L3) outdoor cable and M10 OT/DT terminals (L1, L2, and L3). • If you connect a ground cable to the ground point in the maintenance compartment, you are advised to use a four-core (L1, L2, L3, and PE) outdoor cable, M10 OT/DT terminals (L1, L2, and L3), and M8 OT/DT terminals (PE). You do not need to separately prepare a PE cable.	• Copper-core cable: – L1, L2, L3: 25–95 mm^2 – PE: ≥ 16 mm^2. For details, see **Table 5-6**. • Aluminum alloy cable or copper-clad aluminum cable: – L1, L2, L3: 35–95 mm^2 – PE: ≥ 16 mm^2. For details, see **Table 5-6**.	24–57 mm	Prepared by the customer
4	Tracking system power cable		Three-core outdoor copper cable with dual-layer protection	6 mm^2	14–18 mm	Prepared by the customer
5	DC input power cable	Amphenol UTX PV Connectors	PV cable that meets the 1500 V standard	4–6 mm^2 (12–10 AWG)	4.5–7.8 mm	Prepared by the customer
		MC4 EVO2 PV Connectors		4–6 mm^2 (12–10 AWG)	4.7–6.4 mm	Prepared by the customer

 Copyright © Huawei Technologies Co., Ltd.

Table 5-6 PE cable specifications

Conductor Cross-Sectional Area S of the AC Power Cable (mm^2)	Conductor Cross-Sectional Area S_P of the PE Cable (mm^2)
$16 < S \leq 35$	$S_P \geq 16$
$35 < S$	$S_P \geq S/2$
• The specifications are valid only if the conductors of the PE cable and AC power cable use the same material. If the materials are different, ensure that the conductor cross-sectional area of the PE cable produces a conductance equivalent to that of the cable specified in the table. • The specifications of the PE cable are subject to this table or calculated according to IEC 60364-5-54.	

5.3 Installing the PE Cable

Context

NOTICE

- Proper grounding is helpful for resisting the impact of surge voltage and improving the electromagnetic interference (EMI) performance. Before connecting the AC power cable, DC power cable, and communications cable, connect the PE cable to the PE point.
- It is recommended that the PE cable of the SUN2000 be connected to a nearby PE point. Connect the PE points of all SUN2000s in the same array to ensure equipotential connections to PE cables.

Procedure

Step 1 Connect the PE cable to the PE point.

 Copyright © Huawei Technologies Co., Ltd.

Figure 5-5 Connecting the PE cable to the PE point (on the enclosure shell)

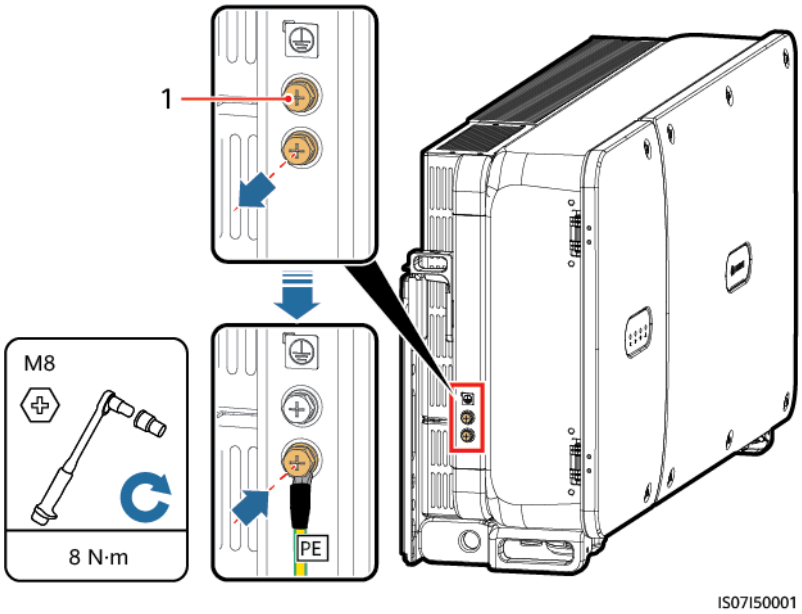

(1) Reserved PE point

----End

Follow-up Procedure

To enhance the corrosion resistance of a ground terminal, apply silica gel or paint on it after connecting the PE cable.

5.4 Opening the Maintenance Compartment Door

Precautions

CAUTION

- Do not open the host panel cover of the SUN2000.
- Before opening the maintenance compartment door, ensure that no electrical connections are made for the SUN2000 on the AC or DC side.
- If you need to open the maintenance compartment door in rainy or snowy days, take protective measures to prevent rain or snow entering the maintenance compartment. If unavoidable, do not open the maintenance compartment door.
- Do not leave unused screws in the maintenance compartment.

Procedure

Step 1 Open the maintenance compartment door and install the support bar.

Figure 5-6 Opening the maintenance compartment door

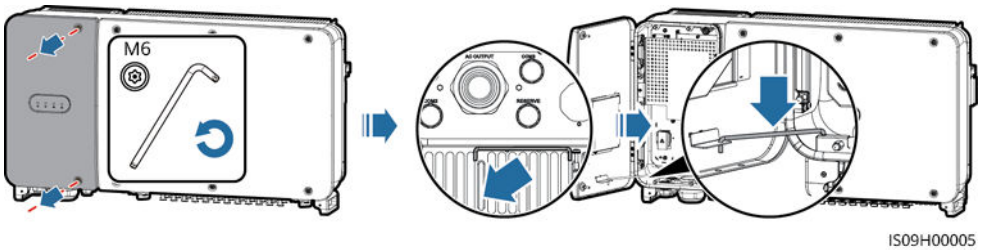

Step 2 Remove the cover and hang it on the hook of the door.

Figure 5-7 Removing the cover

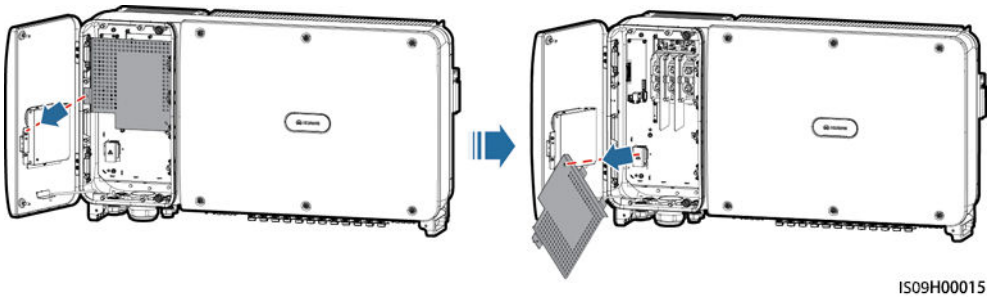

----End

5.5 Connecting an AC Output Power Cable

Prerequisites

- A three-phase AC switch should be installed on the AC side of the solar inverter. To ensure that the solar inverter can safely disconnect itself from the power grid when an exception occurs, select a proper overcurrent protection device in compliance with local power distribution regulations.
- Connect the AC output power cable according to the requirements specified by local power grid operators.

WARNING

Do not connect loads between the solar inverter and the AC switch.

Requirements for the OT/DT terminal

- If a copper cable is used, use copper wiring terminals.
- If a copper-clad aluminum cable is used, use copper wiring terminals.
- If an aluminum alloy cable is used, use copper-aluminum transition wiring terminals, or aluminum wiring terminals along with copper-aluminum transition spacers.

NOTICE

- Do not connect aluminum wiring terminals to the AC terminal block. Otherwise the electrochemical corrosion will occur and affect the reliability of cable connections.
- Comply with the IEC61238-1 requirements when using copper-aluminum transition wiring terminals, or aluminum wiring terminals along with copper-aluminum transition spacers.
- If copper-aluminum transition spacers are used, pay attention to the front and rear sides. Ensure that the aluminum sides of spacers are in contact with aluminum wiring terminals, and copper sides of spacers are in contact with the AC terminal block.

Figure 5-8 Requirements for the OT/DT terminal

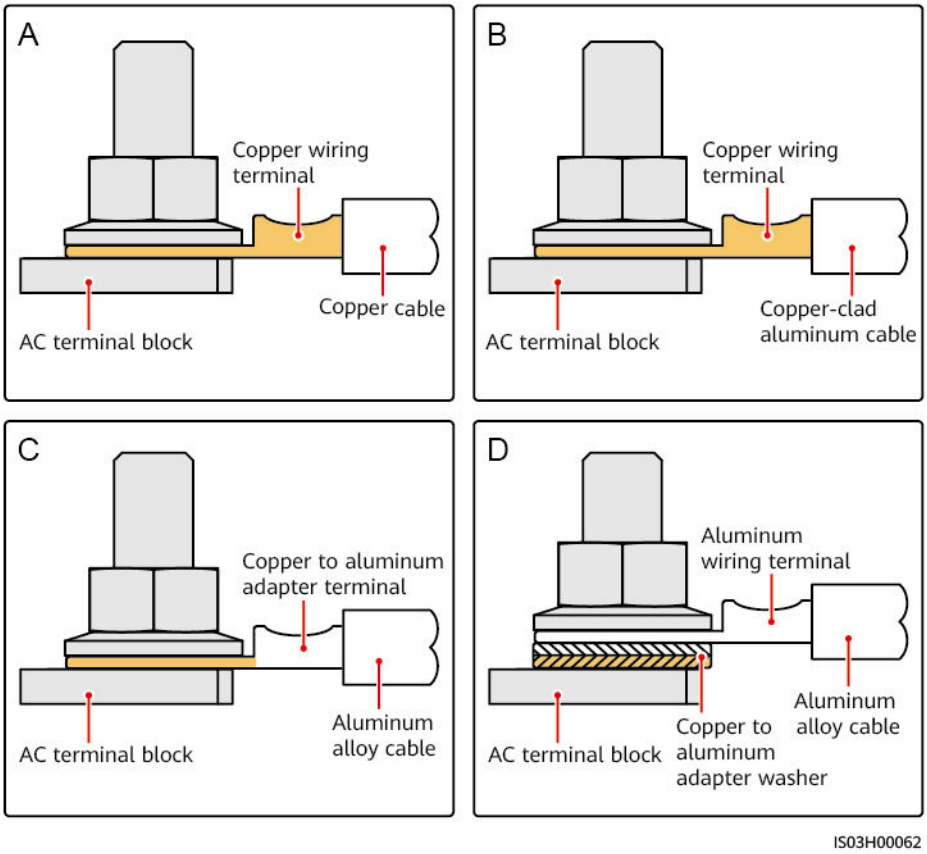

Figure 5-9 AC terminal block dimensions

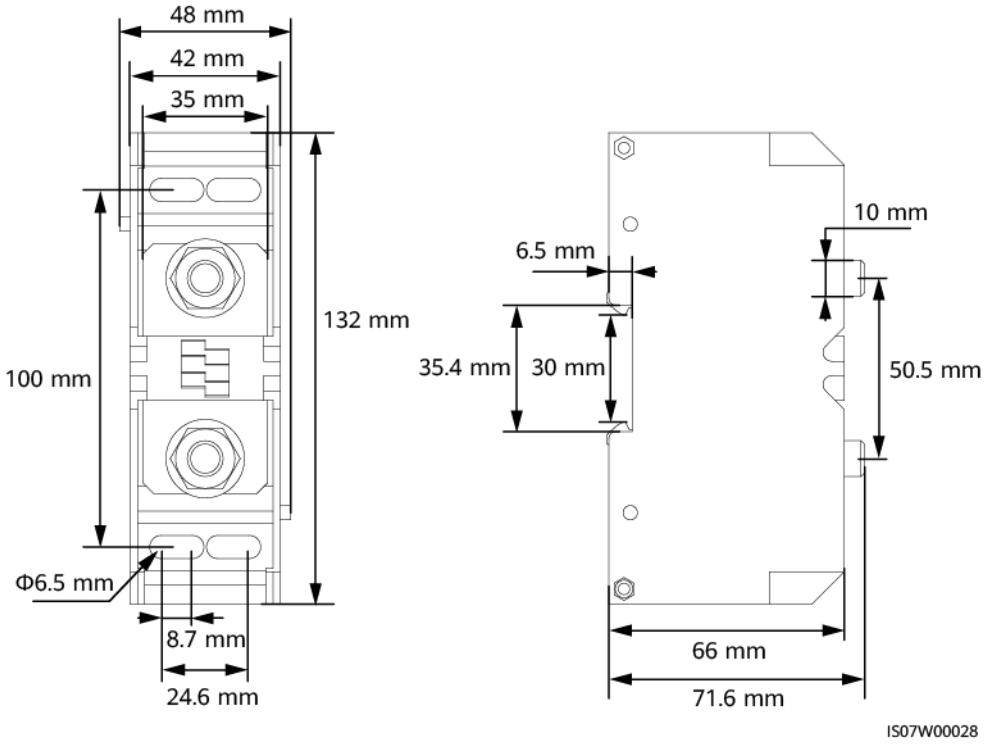

NOTE

This document introduces how to install the four-core AC output power cable, which can be a reference for installing the three-core cable. The three-core cable does not need a PE cable installed in the maintenance compartment.

Procedure

Step 1 Remove the sealing nut and rubber fitting from the waterproof connector.

Step 2 Select an appropriate rubber fitting based on the cable outer diameter.

Step 3 Prepare a cable and crimp OT/DT terminals.

Step 4 Route the cable through the waterproof connector.

Step 5 Secure the AC output power cable and PE cable.

Step 6 Tighten the waterproof connector.

 Copyright © Huawei Technologies Co., Ltd.

NOTICE

- Sufficient slack should be provided in the PE cable to ensure that the last cable bearing the force is the PE cable when the AC output power cable bears pulling force due to force majeure.
- If the cable outer diameter does not match the rubber liner, the IP rating of the device may be affected.
- Do not route the cable with a crimped OT/DT terminal directly through the rubber liner in case it damages the liner.
- Ensure that the cable jacket is in the maintenance compartment.
- Ensure that AC terminations are secured. Failure to do so may cause the SUN2000 to malfunction or damage to its terminal block by issues such as overheating.
- Do not adjust the cable when the sealing nut is tightened. Otherwise, the rubber liner may shift, which affects the IP rating of the device.

Figure 5-10 Installing the AC output power cable

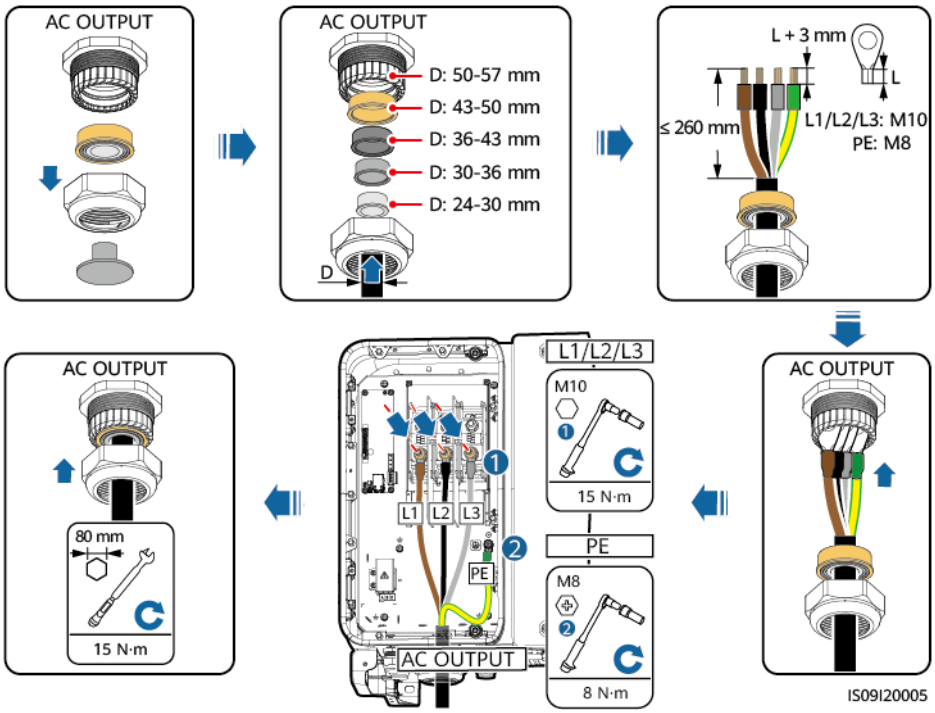

NOTE

The cable colors shown in figures are for reference only. Select an appropriate cable according to the local standards.

----End

Follow-up Procedure

Check that the cable is connected correctly and securely. Then seal the cable gland. Clear the foreign matter from the maintenance compartment.

5.6 Installing the DC Input Power Cable

Precautions

DANGER

- Before connecting the DC input power cable, ensure that the DC voltage is within the safe range (lower than 60 V DC) and that the two DC switches on the SUN2000 are set to OFF. Failure to do so may result in electric shocks.
- When the SUN2000 operates in grid-tied mode, do not to perform maintenance or operations on the DC circuit, such as connecting or disconnecting a PV string or a PV module in the PV string. Failure to do so may cause electric shocks or arcing, which may also cause fire.

WARNING

Ensure that the following conditions are met. Otherwise, the SUN2000 may be damaged, or even a fire could happen.

- The open-circuit voltage of each PV string must always be lower than or equal to 1500 V DC.
- The polarities of electric connections are correct on the DC input side. The positive and negative terminals of a PV module connect to corresponding positive and negative DC input terminals of the SUN2000.

NOTICE

- Ensure that the PV module output is well insulated to ground.
- The PV strings connecting to the same MPPT circuit should contain the same number of identical PV modules.
- The SUN2000 does not support full parallel connection for PV strings (full parallel connection: PV strings connect to one another in parallel outside the SUN2000 and then connect to the SUN2000 independently).
- During the installation of PV strings and the SUN2000, the positive or negative terminals of PV strings may be short-circuited to ground if the power cable is not properly installed or routed. In this case, an AC or DC short circuit may occur and damage the SUN2000. The caused device damage is not covered under any warranty.

Terminal Description

The SUN2000 provides 12 DC input terminals, which are controlled by its two DC switches. DC SWITCH 1 controls DC input terminals 1–6 (MPPT1–3) and DC SWITCH 2 controls DC input terminals 7–12 (MPPT4–6).

 Copyright © Huawei Technologies Co., Ltd.

Figure 5-11 DC terminals

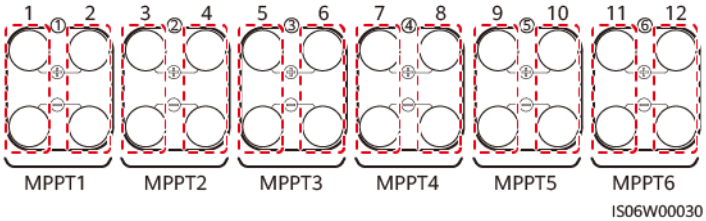

When DC inputs are not fully configured, the input terminals should meet the following requirements:

1. Evenly distribute the DC input power cable on the DC input terminals controlled by the two DC switches.
2. Maximize the number of connected MPPT circuits.

For example, if the number of input routes is 1–11, the recommended DC input terminals are as follows:

Number of PV Strings	Terminal Selection	Number of PV Strings	Terminal Selection
1	Connects to any even-number route.	2	Connects to routes 2 and 10.
3	Connects to routes 2, 6, and 10.	4	Connects to routes 2, 6, 10, and 12.
5	Connects to routes 2, 4, 6, 10, and 12.	6	Connects to routes 2, 4, 6, 8, 10, and 12.
7	Connects to routes 2, 4, 6, 8, 9, 10, and 12.	8	Connects to routes 1, 2, 4, 6, 8, 9, 10, and 12.
9	Connects to routes 1, 2, 4, 6, 7, 8, 9, 10, and 12.	10	Connects to routes 1, 2, 4, 6, 7, 8, 9, 10, 11, and 12.
11	Connects to routes 1, 2, 3, 4, 6, 7, 8, 9, 10, 11, and 12.	-	-

Requirements on Cable Specifications

Cables with high rigidity, such as armored cables, are not recommended, because poor contact may be caused by the bending of cables.

CAUTION

Use the positive and negative metal contacts and DC connectors delivered with the SUN2000. If the PV connectors are lost or damaged, purchase the connectors of the same model. The device damage caused by incompatible PV connectors is not covered under any warranty.

 Copyright © Huawei Technologies Co., Ltd.

Procedure

Step 1 Remove the insulation layer of the DC input power cable by an appropriate length using a wire stripper.

Step 2 Crimp positive and negative metal contacts.

Step 3 Insert the contacts into the corresponding positive and negative connectors.

Step 4 Tighten the lock nuts on the positive and negative connectors.

Step 5 Use a multimeter to measure the voltage between the positive and negative terminals of the PV string (measurement range no less than 1500 V).

- If the voltage is a negative value, the DC input polarity is incorrect and needs correction.
- If the voltage is greater than 1500 V, too many PV modules configured to the same string. Remove some PV modules.

Step 6 Insert the positive and negative connectors into the corresponding DC positive and negative input terminals of the SUN2000.

Figure 5-12 Installing the DC input power cable (Amphenol UTX PV Connectors)

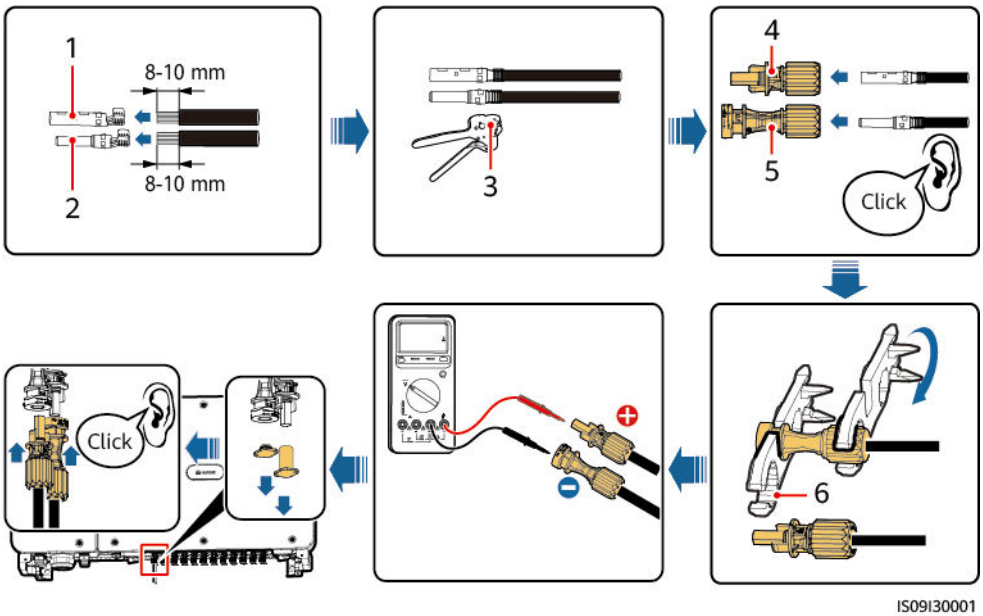

(1) Positive metal contact (female)
(2) Negative metal contact (male)
(3) UTXTC0003 (Amphenol)
(4) Positive connector
(5) Negative connector
(6) UTXTWA001 (Amphenol)

NOTE

Crimp the metal contacts using crimping tool UTXTC0003 (Amphenol, recommended) or UTXTC0002 (Amphenol).

 Copyright © Huawei Technologies Co., Ltd.

Figure 5-13 Installing the DC input power cable (MC4 EVO2 PV Connectors)

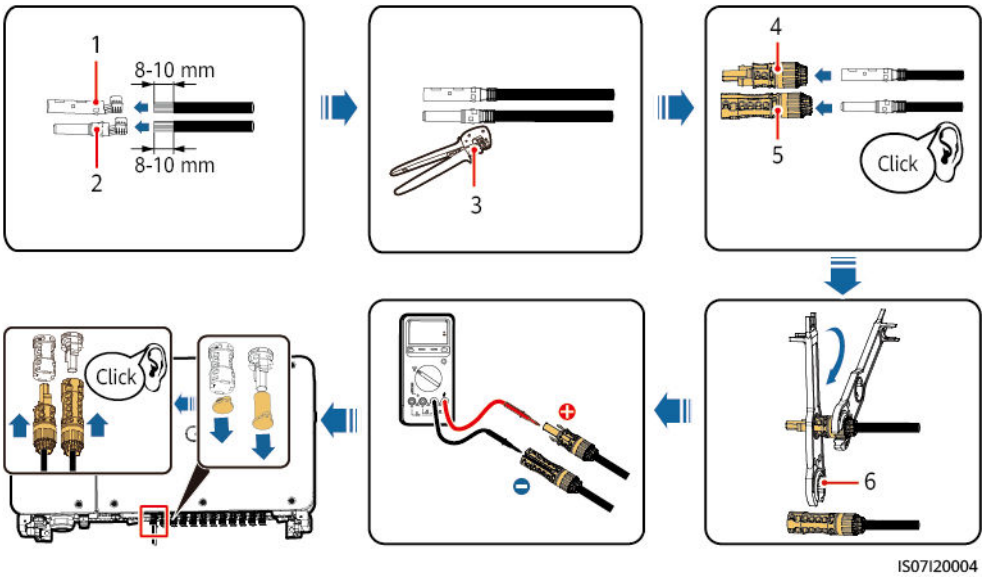

(1) Positive metal contact (female)

(2) Negative metal contact (male)

(3) 32.6020-22100-HZ (STAUBLI)

(4) Positive connector

(5) Negative connector

(6) 13001462 (STAUBLI)

NOTICE

If the DC input power cable is reversely connected and DC switches are set to **ON**, do not turn off the DC switches immediately or unplug positive and negative connectors. The device may be damaged if you do not follow the instruction. The caused equipment damage is beyond the warranty scope. Wait until the solar irradiance declines and the PV string current reduces to below 0.5 A, and then turn off the two DC switches and remove the positive and negative connectors. Correct the string polarity before reconnecting the string to the SUN2000.

----End

5.7 Connecting the RS485 Communications Cable

- When routing the communications cable, separate it from power cables to prevent communication from being affected. Connect the shield layer to the PE point.
- Connect the RS485 communications cable to either a terminal block (recommended) or an RJ45 network port.

 Copyright © Huawei Technologies Co., Ltd.

Connecting to a Terminal Block (Recommended)

Figure 5-14 Connecting the RS485 communications cable (to a terminal block)

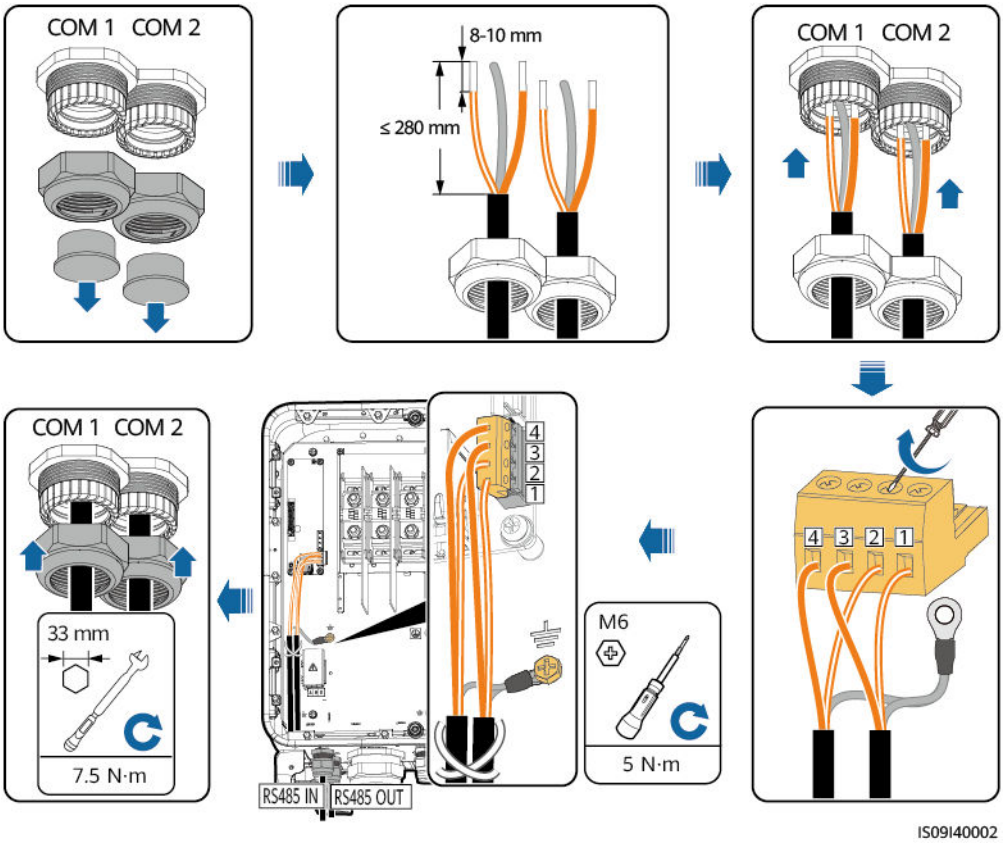

Table 5-7 Terminal block description

No.	Definition	Description
1	RS485A IN	RS485A, RS485 differential signal+
2	RS485A OUT	RS485A, RS485 differential signal+
3	RS485B IN	RS485B, RS485 differential signal–
4	RS485B OUT	RS485B, RS485 differential signal–

 Copyright © Huawei Technologies Co., Ltd.

Connecting to an RJ45 Network Port

Figure 5-15 Connecting the RS485 communications cable (to an RJ45 network port)

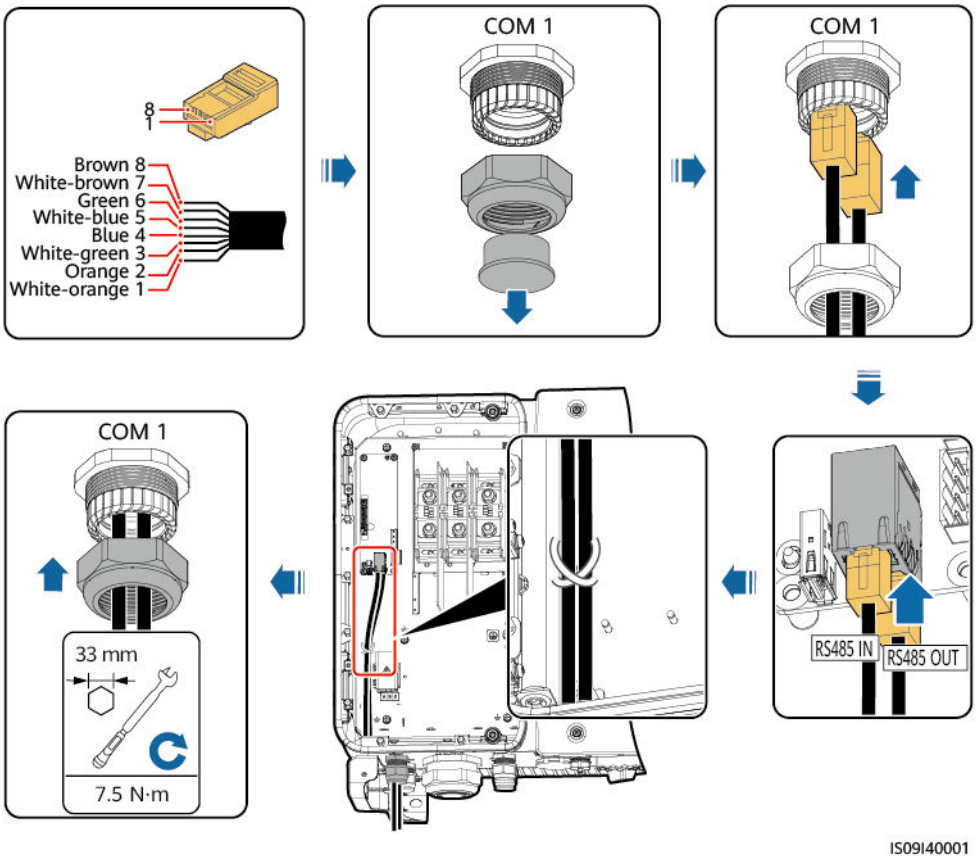

Table 5-8 RJ45 network port description

No.	Description	No.	Description
1, 4	RS485A, RS485 differential signal+	2, 5	RS485B, RS485 differential signal–

Follow-up Operations

Check that the cable is connected correctly and securely. Then seal the cable gland. Clear the foreign matter from the maintenance compartment.

 Copyright © Huawei Technologies Co., Ltd.

5.8 (Optional) Installing the Power Cable of the Tracking System

Precautions

The tracking system should be equipped with an overcurrent protective device/component. The power cable between the device/component and wiring terminal should be no longer than 2.5 m.

WARNING

- The tracking system is powered by the three-phase AC power grid with a rated voltage of 800 V.
- Keep inflammable materials away from the power cable.
- The power cable must be protected with a conduit to prevent short circuits caused by insulation layer damage.

- If there is a power port for the tracking system in the maintenance compartment of the inverter, connect the power cable of the tracking system to the power port.
- If there is no power port, connect the power cable to the AC terminal block.

Connecting the Power Cable to the Power Port for the Tracking System

Step 1 Remove the sealing nut from the cable gland.

Step 2 Prepare a cable.

Step 3 Route the cable through the cable gland.

Step 4 Connect the power cable of the tracking system.

Step 5 Bind the power cable of the tracking system.

Step 6 Tighten the cable gland.

 Copyright © Huawei Technologies Co., Ltd.

Figure 5-16 Connecting the power cable of the tracking system

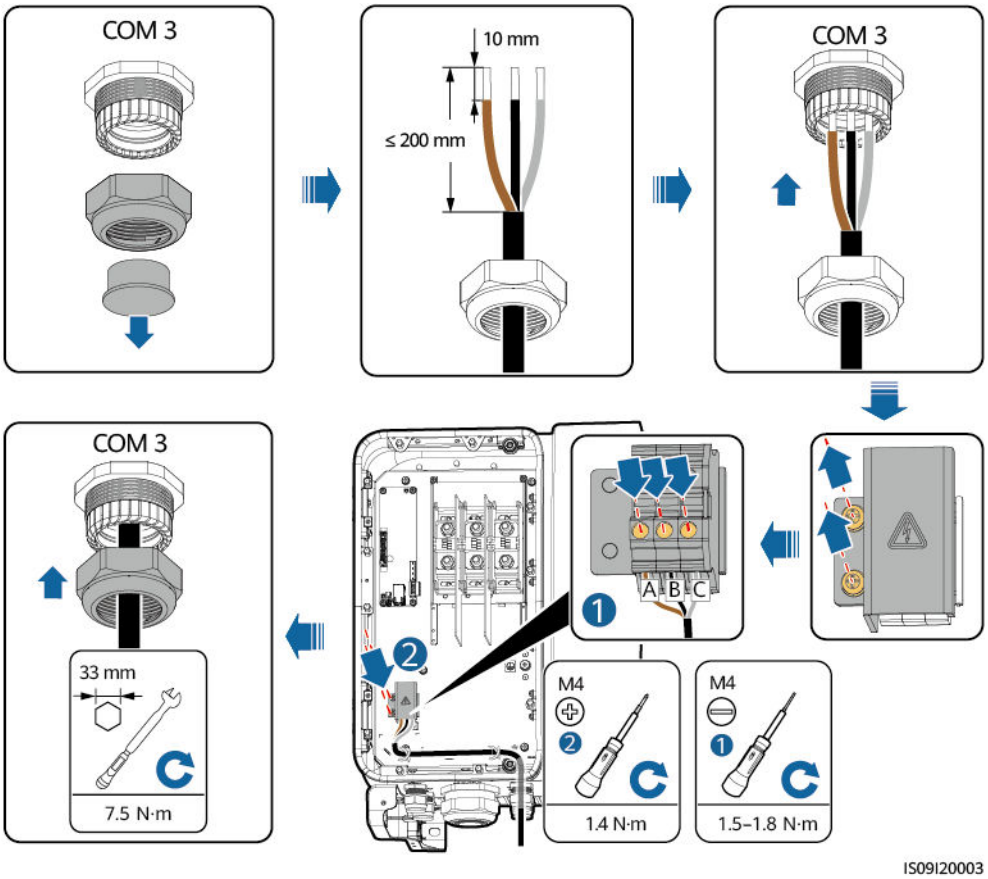

----End

Connecting the Power Cable to the AC Terminal Block

NOTE

You need to prepare the M10 OT terminal before installing the power cable of the tracking system to the AC terminal block.

Step 1 Remove the sealing nut from the cable gland.

Step 2 Prepare a cable.

Step 3 Route the cable through the cable gland.

Step 4 Connect the power cable of the tracking system.

NOTICE

Connect the OT/DT terminal of the AC output cable and the OT terminal of the power cable of the tracking system to the AC terminal block with the latter placed on top of the former. Ensure that the terminals are separated in the wiring area and are connected securely.

Step 5 Tighten the cable gland.

Figure 5-17 Connecting the power cable of the tracking system

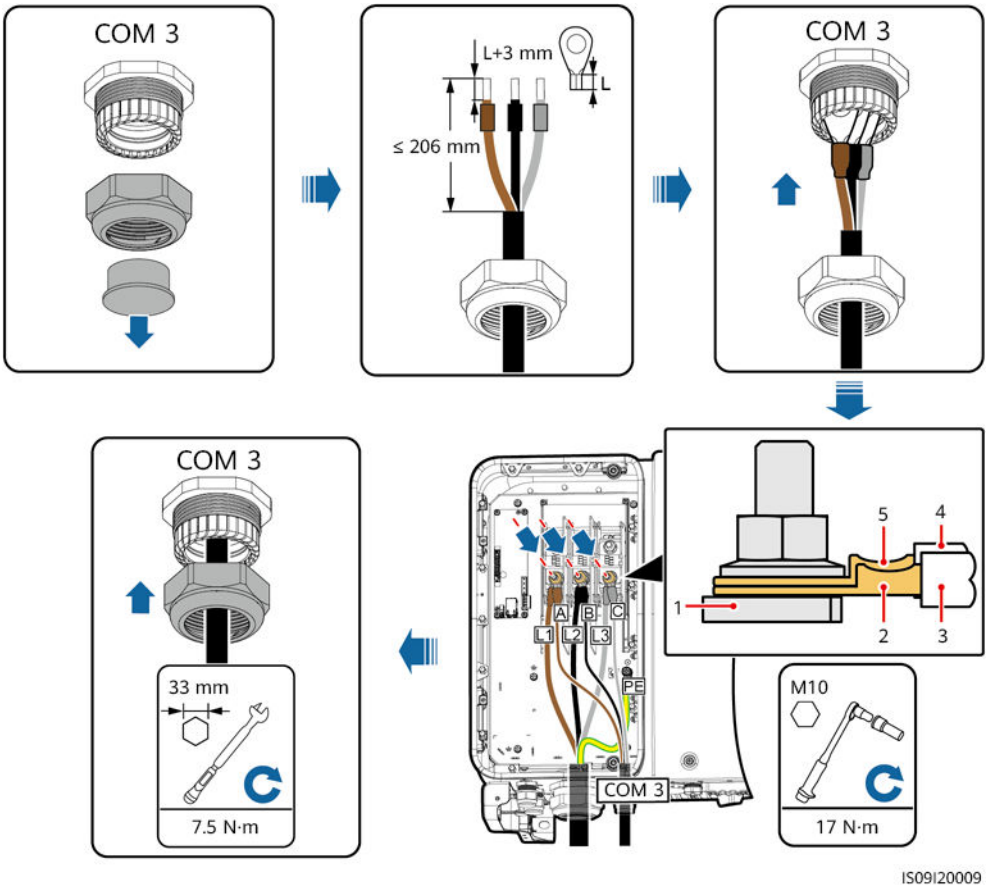

(1) AC terminal block	(2) OT/DT terminal of the AC output power cable	(3) AC output power cable
(4) Power cable of the tracking system	(5) OT terminal of the power cable of the tracking system	-

----End

Follow-up Operations

Check that the cable is connected correctly and securely. Then seal the cable gland. Clear the foreign matter from the maintenance cavity.

5.9 Closing the Maintenance Compartment Door

Procedure

Step 1 Install the AC terminal cover and then install the support bar.

Step 2 Close the maintenance compartment door and tighten the two screws on the door.

Figure 5-18 Closing the maintenance compartment door

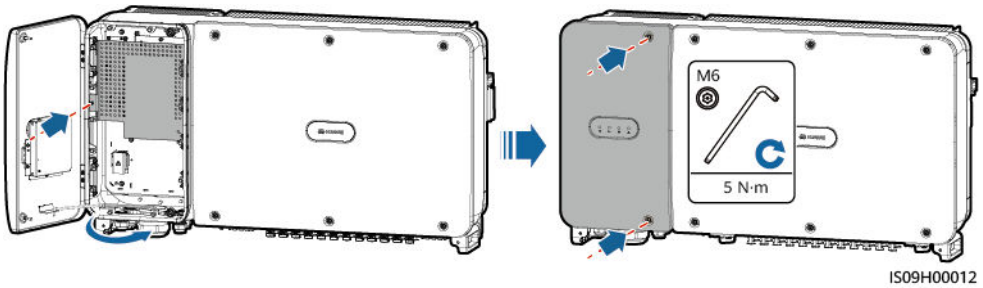

NOTE

If the screws on the door are lost, use the spare screws in the fitting bag at the bottom of the enclosure.

----End

6 Commissioning

6.1 Checking Before Power-On

No.	Acceptance Criteria
1	The SUN2000 is installed correctly and securely.
2	DC switches and the downstream AC switch are OFF.
3	All cables are connected correctly and securely.
4	Used cable glands are sealed and locking caps are tightened.
5	Unused terminals and ports are locked by watertight caps.
6	The installation space is proper, and the installation environment is clean and tidy, without foreign matter.
7	The AC terminal cover is reinstalled.
8	The maintenance compartment door is closed and the door screws are tightened.

 Copyright © Huawei Technologies Co., Ltd.

6.2 Powering On the SUN2000

Precautions

NOTICE

- Before turning on the AC switch between the SUN2000 and the power grid, use a multimeter set to the AC position to check that the AC voltage is within the specified range.
- If the solar inverter has not been running for more than half a year after being mounted, it must be checked and tested by professionals before being put into operation.

Procedure

Step 1 Turn on the AC switch between the SUN2000 and the power grid.

NOTICE

If you perform **Step 2** before **Step 1**, the SUN2000 reports a fault about abnormal shutdown. You can start the SUN2000 only after the fault is automatically rectified.

Step 2 Turn on the DC switches at the bottom of the SUN2000.

NOTE

For the SUN2000-90KTL-H2, remove the screw from a DC switch before turning on the DC switch. Keep the screw properly for future use after the SUN2000 is powered off.

Step 3 Perform quick settings on the app. For details, see **7 Man-Machine Interactions**.

----End

 Copyright © Huawei Technologies Co., Ltd.

7 Man-Machine Interactions

7.1 Operations with the SUN2000 App

7.1.1 App Introduction

Functions

- The FusionSolar app is recommended when the SUN2000 is connected to the FusionSolar hosting cloud. The SUN2000 app is recommended when the SUN2000 is connected to other management systems.
- The SUN2000 or FusionSolar app (app for short) is a mobile phone app that communicates with the SUN2000 over a WLAN/Bluetooth module or a USB data cable to allow for querying alarms, setting parameters, and performing routine maintenance as an easy-to-use maintenance platform.

Connection Mode

After the DC or AC side of the SUN2000 is powered on, you can connect the app to it through a WLAN module, a Bluetooth module or a USB data cable.

NOTICE

- Over a WLAN module: The USB-Adapter2000-C WLAN module is supported.
- Over a Bluetooth module: The USB-Adapter2000-B Bluetooth module is supported.
- Over a USB data cable: The USB 2.0 port is supported. Use the USB data cable delivered with the mobile phone.
- Mobile phone operating system: Android 4.0 or later.
- Recommended phone brands: Huawei and Samsung.

 Copyright © Huawei Technologies Co., Ltd.

Figure 7-1 Connection over a WLAN module or a Bluetooth module

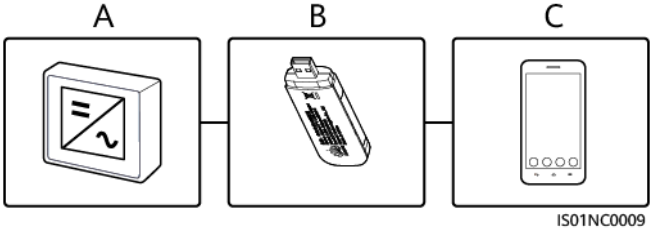

(A) SUN2000 (B) WLAN module or Bluetooth module (C) Mobile phone

Figure 7-2 Connection over a USB data cable

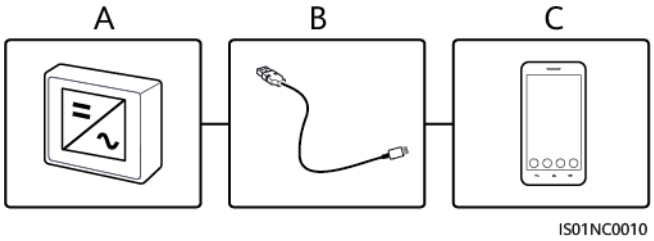

(A) SUN2000 (B) USB data cable (C) Mobile phone

Disclaimer

NOTICE

- The configurable parameters of the SUN2000 vary with the device model and grid code.
- If you change the grid code, some parameters may be restored to factory defaults. After the grid code is changed, check whether the previously set parameters are affected.
- Delivering a reset, factory reset, shutdown, or upgrade command to the solar inverters may cause power grid connection failure, which affects the energy yield.
- Only professionals are allowed to set the grid parameters, protection parameters, feature parameters, and power adjustment parameters of the solar inverters. If the grid parameters, protection parameters, and feature parameters are incorrectly set, the solar inverters may not connect to the power grid. If the power adjustment parameters are incorrectly set, the solar inverters may not connect to the power grid as required. In these cases, the energy yield will be affected.
- The parameter names, value ranges, and default values are subject to change.

7.1.2 Downloading and Installing the App

- FusionSolar app: Scan the QR code and download the latest installation package.

- SUN2000 app: Log in to Huawei AppGallery (https://appstore.huawei.com), search for **SUN2000**, and download the app installation package. You can also scan the QR code (https://solar.huawei.com/~/media/Solar/APP/SUN2000.apk) to download the installation package.

QR code:

FusionSolar SUN2000

7.1.3 Logging In to the App

Prerequisites

- The DC or AC side of the SUN2000 has been energized.
- Connection over a WLAN module or a Bluetooth module:
  a. The WLAN module or Bluetooth module is connected to the **USB** port at the bottom of the SUN2000.
  b. The WLAN or Bluetooth function is enabled.
  c. Keep the mobile phone within 5 m from the SUN2000. Otherwise, the communication between them would be affected.
- Connection over a USB cable:
  a. The USB data cable is connected from the USB port at the bottom of the SUN2000 to the port on the mobile phone.
  b. If the USB data cable is successfully connected, the message **Connected to USB Accessory** will pop up on the phone. Otherwise, the cable is not connected.

Procedure

1. Run the app and select a connection mode.

 Copyright © Huawei Technologies Co., Ltd.

NOTE

- The screenshots in this document correspond to the SUN2000 app 3.2.00.003 (Android) and FusionSolar app 2.5.7 (Android).
- When the WLAN connection is used, scan the QR code of the WLAN module to access the login screen.
- When the WLAN connection is used, the initial name of the WLAN hotspot is **Adapter-WLAN module SN**, and the initial password is **Changeme**. Use the initial password upon first power-on and change it immediately after login. To ensure account security, change the password periodically and keep the new password in mind. Not changing the initial password may cause password disclosure. A password left unchanged for a long period of time may be stolen or cracked. If a password is lost, devices cannot be accessed. In these cases, the user is liable for any loss caused to the PV plant.
- When the Bluetooth connection is used, the connected Bluetooth device is named after **last 8 digits of the SN barcode+HWAPP**.
- After you select **Use by default for this USB accessory**, a message that asks you to confirm the USB access will not appear if you log in to the app again without removing the USB data cable.

a. (Scenario in which the SUN2000 is connected to the FusionSolar hosting cloud) Run the FusionSolar app and access the **Device Commissioning** screen.

 Copyright © Huawei Technologies Co., Ltd.

Figure 7-3 Selecting a connection mode (with network access)

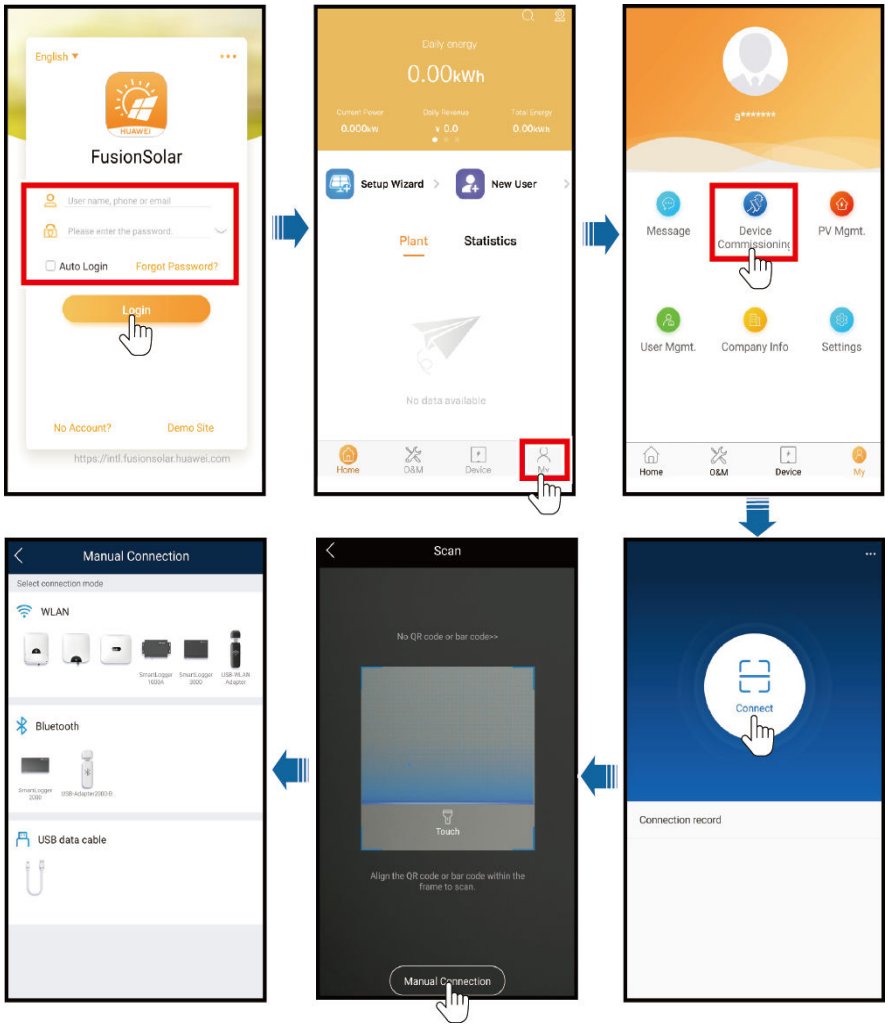

Figure 7-4 Selecting a connection mode (without network access)

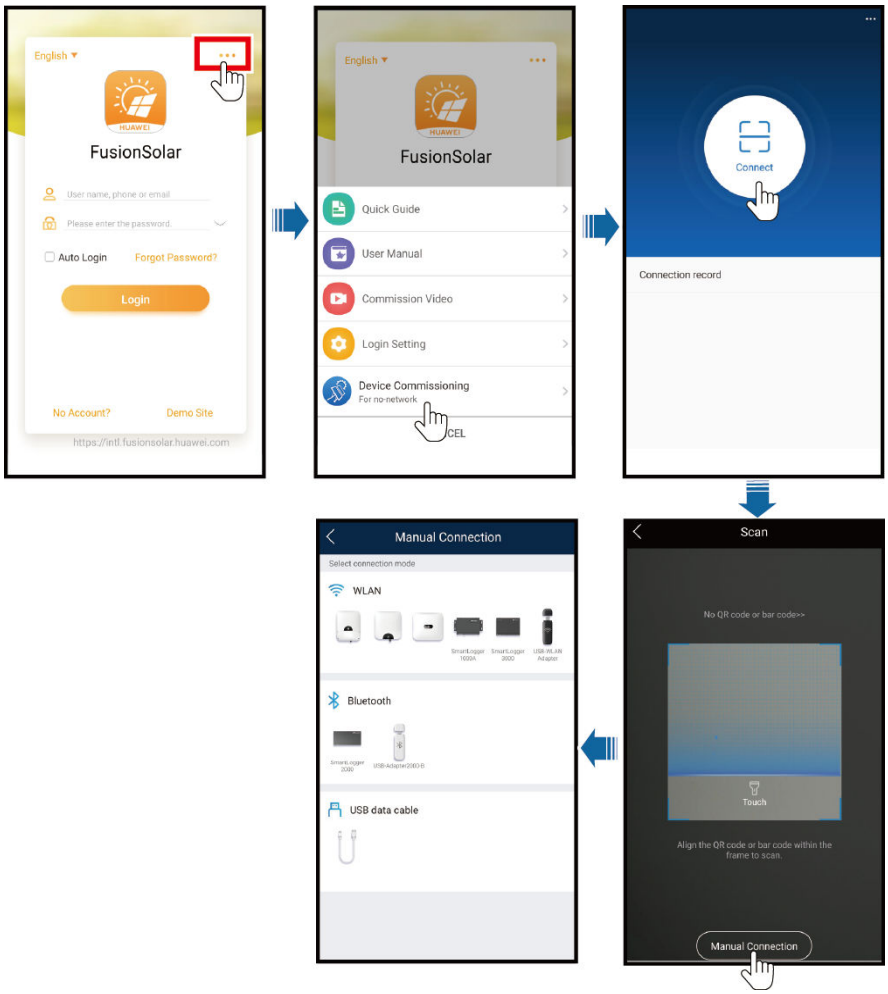

b. (Scenario in which the SUN2000 is connected to other management systems) Run the SUN2000 app and access the operation screen.

Figure 7-5 Selecting a connection method

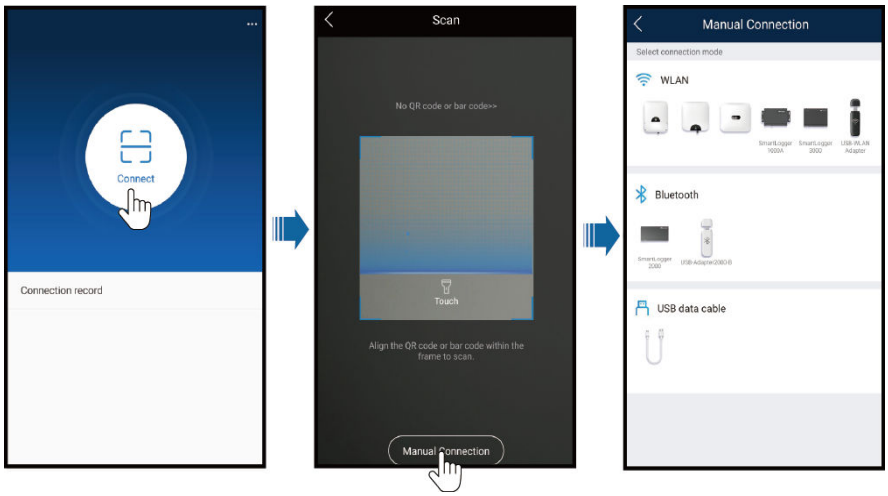

2. Select a login user and enter the login password to access the quick settings screen or the main menu screen.

NOTICE

- The login password is the same as that for the SUN2000 connected to the app and is used only when the SUN2000 connects to the app.
- The initial passwords for **Common User**, **Advanced User**, and **Special User** are all **00000a**.
- Use the initial password upon first power-on and change it immediately after login. To ensure account security, change the password periodically and keep the new password in mind. Not changing the initial password may cause password disclosure. A password left unchanged for a long period of time may be stolen or cracked. If a password is lost, devices cannot be accessed. In these cases, the user is liable for any loss caused to the PV plant.
- During the login, if five consecutive invalid password entries are made (the interval between two consecutive entries is less than 2 minutes), the account will be locked for 10 minutes. The password should consist of six characters.
- If you log in to the app after the device connects to the app for the first time or factory defaults are restored, the quick settings screen will be displayed. Set basic parameters as prompted. If you do not set basic parameters for the inverter on the quick settings screen, the screen is still displayed when you log in to the app next time.
- To set SUN2000 basic parameters on the quick settings screen, switch to **Advanced User**. If you log in as **Common User** or **Special User**, enter the password of the advanced user to access the **Quick Settings** screen.

Figure 7-6 Login

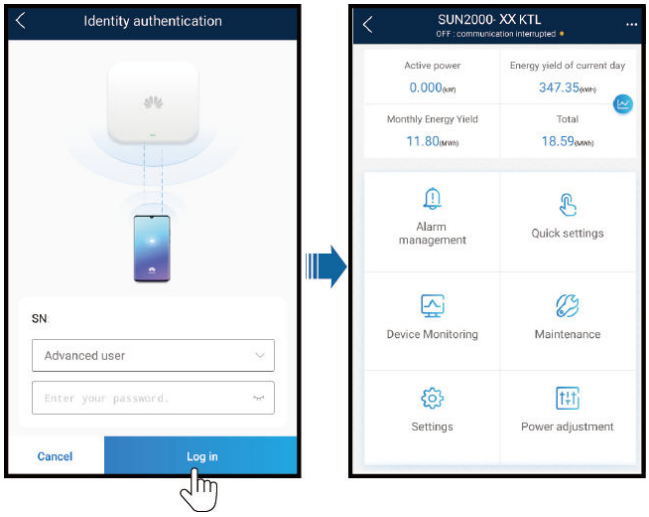

7.1.4 Operations Related to the Advanced User

Ensure that the DC side of the SUN2000 is energized before setting grid parameters, protection parameters, and feature parameters.

7.1.4.1 Setting Grid Parameters

Procedure

Step 1 Choose **Settings** > **Grid parameters** to set grid parameters.

Figure 7-7 Grid parameters

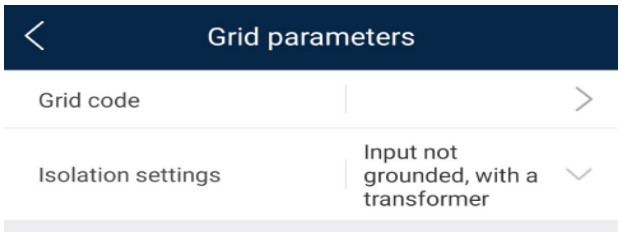

Table 7-1 Grid parameters

Parameter	Description
Grid Code	Set this parameter based on the grid code of the country or region where the inverter is used and the inverter application scenario.
Isolation settings	Set the working mode of the inverter based on the grounding status at DC side and the connection to the power grid.

----End

7.1.4.2 Setting Protection Parameters

Procedure

Step 1 Choose **Settings** > **Protection parameters** to set protection parameters.

Figure 7-8 Protection parameters

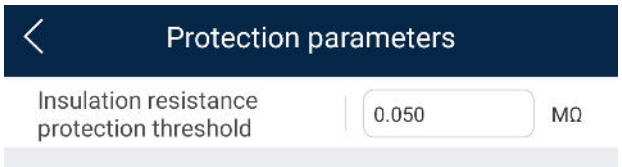

Table 7-2 Protection parameters

Parameter	Description
Insulation resistance protection threshold (MΩ)	To ensure device safety, the inverter detects the insulation resistance of the input side with respect to ground when it starts a self-check. If the detected value is less than the preset value, the inverter does not connect to the grid.

----End

7.1.4.3 Setting Feature Parameters

Procedure

Step 1 Choose **Settings** > **Feature parameters** to set feature parameters.

Figure 7-9 Feature parameters

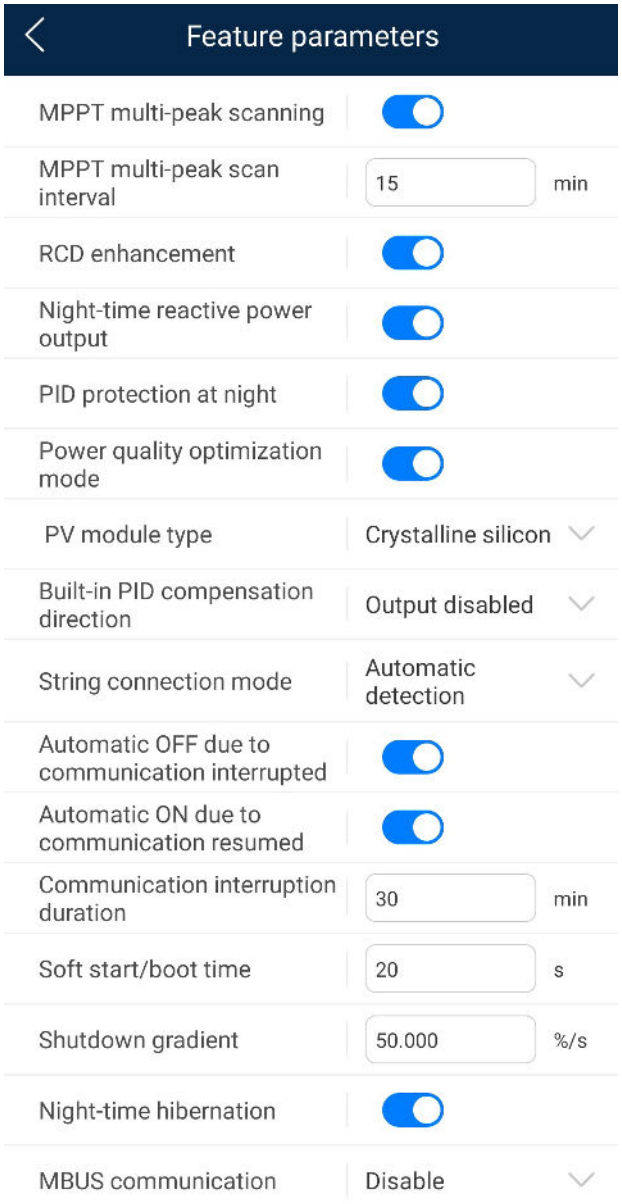

Table 7-3 Feature parameters

Parameter	Description
MPPT multi-peak scanning	When the inverter is used in scenarios where PV strings are greatly shaded, set this parameter to **Enable**, and then the inverter will perform MPPT scanning at regular intervals to locate the maximum power.
MPPT multi-peak scan interval (min)	Specifies the MPPT scanning interval. This parameter is displayed when **MPPT multi-peak scanning** is set to **Enable**.
RCD enhancement	RCD refers to the residual current of the inverter to the ground. To ensure device and personal safety, RCD should be limited to the specified value in the standard. If an AC switch with a residual current detection function is installed outside the inverter, this function should be enabled to reduce the residual current generated when the inverter is running, thereby preventing the AC switch from misoperations.
Night-time reactive power output	In some specific application scenarios, a power grid company requires that the inverter can perform reactive power compensation at night to ensure that the power factor of the local power grid meets requirements. This parameter is displayed when **Isolation settings** is set to **Input ungrounded, with TF**.
PID protection at night	When the inverter outputs reactive power at night and this parameter is set to **Enable**, the inverter will shut down automatically if it detects abnormal status of the PID compensation.
Power quality optimization mode	If this parameter is set to **Enable**, the inverter output current harmonics will be optimized.
PV module type	This parameter is used to set different types of PV modules and the shutdown time of the concentration PV module. If the concentration PV modules are shaded, the power drops drastically to 0 and the inverter shuts down. The energy yield would be affected since it takes too long for the power to resume and inverter to restart. The parameter does not need to be set for crystalline silicon and filmy PV modules. ● If this parameter is set to **Crystalline silicon** or **Film**, the inverter automatically detects the power of PV modules when they are shaded and shuts down if the power is too low. ● When concentration PV modules are used: – If this parameter is set to **CPV 1**, the inverter can quickly restart in 60 minutes if the input power of PV modules drops drastically due to shading. – If this parameter is set to **CPV 2**, the inverter can quickly restart in 10 minutes if the input power of PV modules drops drastically due to shading.

 Copyright © Huawei Technologies Co., Ltd.

Parameter	Description
PID compensation direction (or Crystalline silicon PV compensation mode)	When the external PID module compensates the PID voltage for the PV system, set **Built-in PID compensation direction** to the actual compensation direction of the PID module so that the inverter can output reactive power at night. This parameter is displayed when **PV module type** is set to **Crystalline silicon**. Select **PV–positive offset** for P-type PV modules. Select **PV+ negative offset** for N-type PV modules.
String connection mode	Set the connection mode of PV strings. ● When PV strings connect to the SUN2000 separately (fully separate connection), there is no need to set this parameter. The SUN2000 can automatically detect the connection mode of the PV strings. ● When PV strings connect to one another in parallel outside the SUN2000 and then connect to SUN2000 independently (fully parallel connection), set this parameter to **All PV strings connected**.
Automatic OFF due to communication interrupted	The standards of certain countries and regions require that the inverter must shut down after the communication is interrupted for a certain time. If **Automatic OFF due to communication interrupted** is set to **Enable** and the inverter communication is interrupted for a specified time (set by **Communication interruption duration**), the inverter will automatically shut down. **NOTICE** Setting this parameter to **Enable** may cause power grid connection failure of the solar inverters, which affects the energy yield.
Automatic ON due to communication resumed	If this parameter is set to **Enable**, the inverter automatically starts after communication recovers. If this parameter is set to **Disable**, the inverter needs to be started manually after communication recovers. This parameter is displayed when **Automatic OFF due to communication interrupted** is set to **Enable**.
Communication interruption duration (min)	Specifies the duration for determining communication interruption. Used for automatic shutdown for protection in case of communication interruption.
Soft start/boot time (s)	Specifies the duration for the power to gradually increase when the inverter starts.
Shutdown gradient (%/s)	Specifies the power change speed when the inverter shuts down.
Night-time hibernation	The inverter monitors PV strings at night. If this parameter is set to **Enable**, the monitoring function of the inverter will hibernate at night to reduce power consumption.

 Copyright © Huawei Technologies Co., Ltd.

Parameter	Description
MBUS communication	For inverters that support RS485 communication and MBUS communication, you are advised to set this parameter to **Disable** to reduce power consumption.
Delay upgrade	This parameter is mainly used in the upgrade scenarios where the PV power supply is disconnected at night due to no sunlight or unstable at dawn or dusk due to poor sunlight. After the inverter starts to upgrade, if **Delay upgrade** is set to **Enable**, the upgrade package is loaded first. After the PV power supply recovers and the activation conditions are met, the inverter automatically activates the upgrade.
RS485-2 communication	If this parameter is set to **Enable**, the RS485-2 port can be used. If the port is not used, you are advised to set this parameter to **Disable** to reduce power consumption.
String monitor	The inverter monitors PV strings in real time. If any PV string is abnormal (such as the PV string is shaded or the electric energy yield decreases), the inverter generates an alarm to remind maintenance personnel to maintain the PV string in a timely manner. If PV strings are often shaded, you are advised to set **String monitor** to **Disable** to prevent false alarms.
String detection reference asymmetric coefficient	Specifies the threshold for determining PV string exception. The false alarms caused by fixed shadow shading can be controlled by changing this parameter. This parameter is displayed when **String monitor** is set to **Enable**.
String detection starting power percentage (%)	Specifies the threshold for starting PV string exception detection. The false alarms caused by fixed shadow shading can be controlled by changing this parameter. This parameter is displayed when **String monitor** is set to **Enable**.
Duration for determining short-time grid disconnection (ms)	The standards of certain countries and regions require that the inverter should not disconnect from the power grid if the power grid experiences a short-time failure. After the fault is rectified, the inverter output power needs to be quickly restored.

----End

7.1.5 Operations Related to the Special User

Ensure that the DC side of the SUN2000 is energized before setting grid parameters, protection parameters, feature parameters, and grid adjustment parameters.

 Copyright © Huawei Technologies Co., Ltd.

7.1.5.1 Setting Grid Parameters

Procedure

Step 1 Choose **Settings** > **Grid parameters** to set grid parameters.

Figure 7-10 Grid parameters

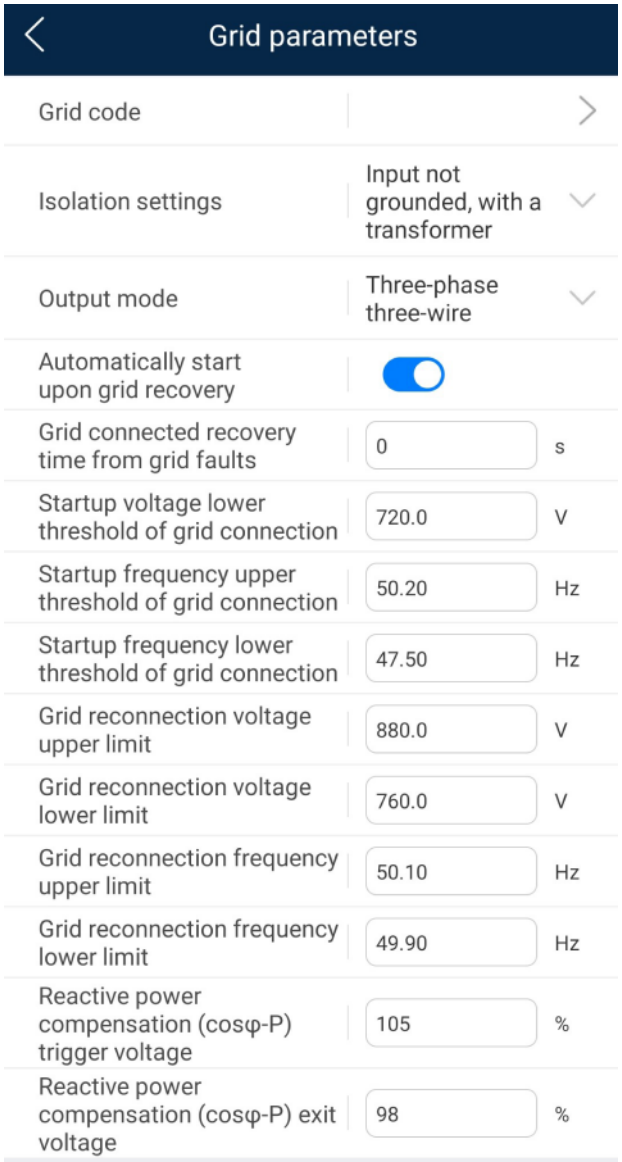

Table 7-4 Grid parameters

Parameter	Description
Grid Code	Set this parameter based on the grid code of the country or region where the inverter is used and the inverter application scenario.
Isolation settings	Set the working mode of the inverter based on the grounding status at DC side and the connection to the power grid.

Parameter	Description
Output mode	Specifies whether the inverter output has a neutral wire based on the application scenario.
Automatically start upon grid recovery	Specifies whether to allow the inverter to automatically start after the power grid recovers.
Grid connected recovery time from grid faults (s)	Specifies the time after which the inverter begins restarting after the power grid recovers.
Startup voltage lower threshold of grid connection (V)	According to the standards of certain countries and regions, after the inverter is powered on for the first time for grid connection, if the power grid voltage is lower than **Startup voltage lower threshold of grid connection**, the inverter is not allowed to connect to the grid.
Startup frequency upper threshold of grid connection (Hz)	According to the standards of certain countries and regions, after the inverter is powered on for the first time for grid connection, if the power grid voltage is higher than **Startup frequency upper threshold of grid connection**, the inverter is not allowed to connect to the grid.
Startup frequency lower threshold of grid connection (Hz)	According to the standards of certain countries and regions, after the inverter is powered on for the first time for grid connection, if the power grid voltage is lower than **Startup frequency lower threshold of grid connection**, the inverter is not allowed to connect to the grid.
Grid reconnection voltage upper limit (V)	The standards of certain countries and regions require that after the inverter shuts down for protection due to a fault, if the power grid voltage is higher than **Grid reconnection voltage upper limit**, the inverter is not allowed to reconnect to the grid.
Grid reconnection voltage lower limit (V)	The standards of certain countries and regions require that after the inverter shuts down for protection due to a fault, if the power grid voltage is lower than **Grid reconnection voltage lower limit**, the inverter is not allowed to reconnect to the grid.
Grid reconnection frequency upper limit (Hz)	The standards of certain countries and regions require that after the inverter shuts down for protection due to a fault, if the power grid frequency is higher than **Grid reconnection frequency upper limit**, the inverter is not allowed to reconnect to the grid.
Grid reconnection frequency lower limit (Hz)	The standards of certain countries and regions require that after the inverter shuts down for protection due to a fault, if the power grid frequency is lower than **Grid reconnection frequency lower limit**, the inverter is not allowed to reconnect to the grid.
Reactive power compensation (cosϕ-P) trigger voltage (%)	Specifies the voltage threshold for triggering reactive power compensation based on the cosϕ-P curve.
Reactive power compensation (cosϕ-P) exit voltage (%)	Specifies the voltage threshold for exiting reactive power compensation based on the cosϕ-P curve.

 Copyright © Huawei Technologies Co., Ltd.

----End

7.1.5.2 Setting Protection Parameters

Procedure

Step 1 Choose **Settings** > **Protection parameters** to set protection parameters.

Figure 7-11 Protection parameters

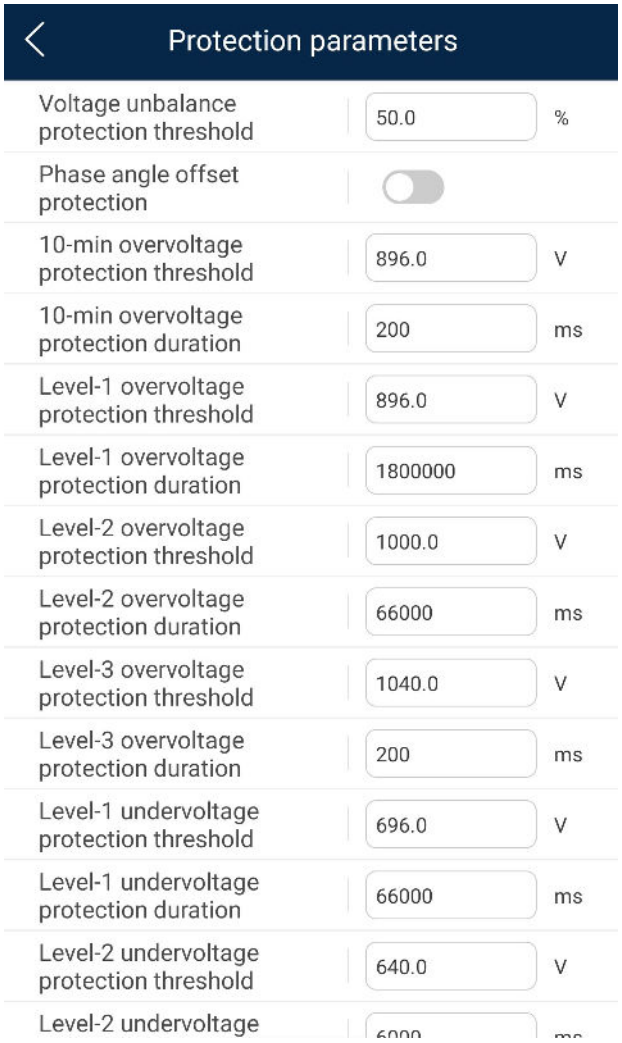

Table 7-5 Protection parameters

Parameter	Description
Voltage unbalance protection threshold (%)	Specifies the inverter protection threshold when the power grid voltage is unbalanced.

Parameter	Description
Phase angle offset protection	The standards of certain countries and regions require that the inverter needs to be protected when the phase angle offset of the power grid three phases exceeds a certain value.
10-min overvoltage protection threshold (V)	Specifies the 10-minute overvoltage protection threshold.
10-min overvoltage protection duration (ms)	Specifies the 10-minute overvoltage protection duration.
Level-N overvoltage protection threshold (V)	Specifies the level-N grid overvoltage protection threshold. **NOTE** ● N can be 1, 2, 3, or 4. ● When **HVRT** is set to **Enable** and **Level-1 overvoltage protection threshold** is higher than **Threshold for triggering HVRT**, if the grid voltage is between **Threshold for triggering HVRT** and **Level-1 overvoltage protection threshold**, the SUN2000 could start and shut down repeatedly.
Level-N overvoltage protection duration (ms)	Specifies the level-N grid overvoltage protection duration. **NOTE** N can be 1, 2, 3, or 4.
Level-N undervoltage protection threshold (V)	Specifies the level-N grid undervoltage protection threshold. **NOTE** ● N can be 1, 2, 3, or 4. ● When **LVRT** is set to **Enable** and **Level-1 undervoltage protection threshold** is lower than **Threshold for triggering LVRT**, if the grid voltage is between **Level-1 undervoltage protection threshold** and **Threshold for triggering LVRT**, the SUN2000 could start and shut down repeatedly.
Level-N undervoltage protection duration (ms)	Specifies the level-N grid undervoltage protection duration. **NOTE** N can be 1, 2, 3, or 4.
Level-N overfrequency protection threshold (Hz)	Specifies the level-N grid overfrequency protection threshold. **NOTE** N can be 1 or 2.
Level-N overfrequency protection duration (ms)	Specifies the level-N grid overfrequency protection duration. **NOTE** N can be 1 or 2.
Level-N underfrequency protection threshold (Hz)	Specifies the level-N grid underfrequency protection threshold. **NOTE** N can be 1 or 2.
Level-N underfrequency protection duration (ms)	Specifies the level-N grid underfrequency protection duration. **NOTE** N can be 1 or 2.

----End

 Copyright © Huawei Technologies Co., Ltd.

7.1.5.3 Setting Feature Parameters

Procedure

Step 1 Choose **Settings** > **Feature parameters** to set feature parameters.

Figure 7-12 Feature parameters

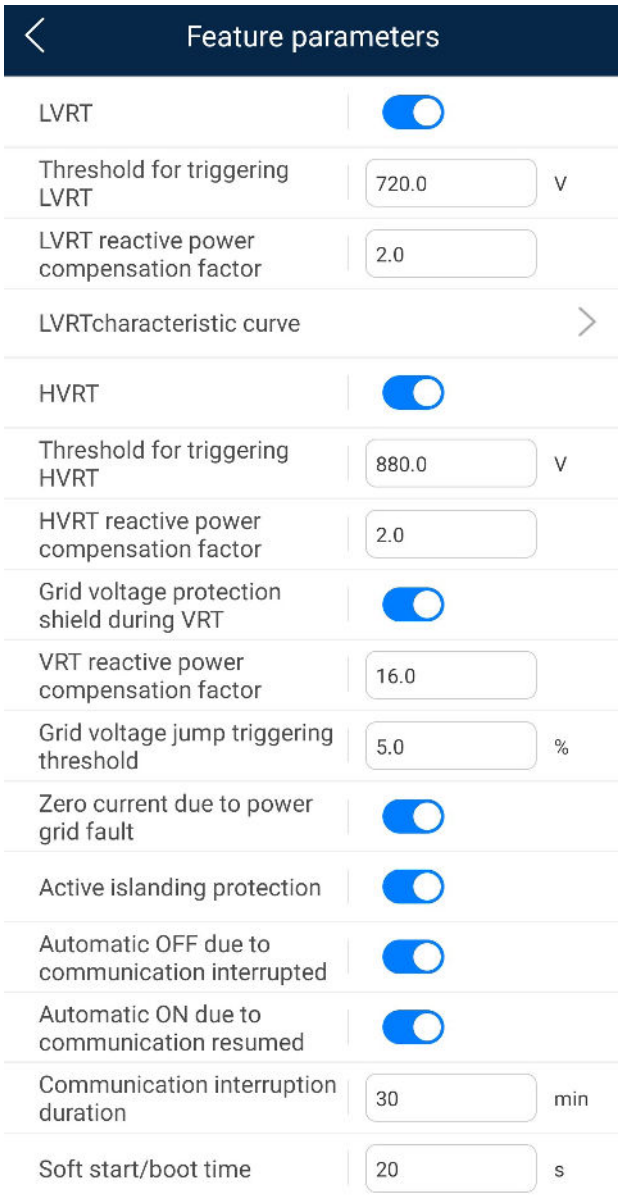

Table 7-6 Feature parameters

Parameter	Description
LVRT	LVRT is short for low voltage ride-through. When the grid voltage is abnormally low for a short time, the inverter cannot disconnect from the power grid immediately and has to work for some time.

Parameter	Description
Threshold for triggering LVRT (V)	Specifies the threshold for triggering LVRT. The threshold settings should meet the local grid standard. This parameter is displayed when **LVRT** is set to **Enable**.
LVRT reactive power compensation factor	During LVRT, the inverter needs to generate reactive power to support the power grid. This parameter is used to set the reactive power generated by the inverter. ● This parameter is displayed when **LVRT** is set to **Enable**. ● For example, if this parameter is set to **2**, the reactive power generated by the inverter is 20% of the rated power when the AC voltage drops by 10% during LVRT.
HVRT	HVRT is short for high voltage ride-through. When the grid voltage is abnormally high for a short time, the inverter cannot disconnect from the power grid immediately and has to work for some time.
Threshold for triggering HVRT (V)	Specifies the threshold for triggering HVRT. The threshold settings should meet the local grid standard. This parameter is displayed when **HVRT** is set to **Enable**.
HVRT compensation power factor of reactive power in positive sequence	During HVRT, the inverter needs to generate reactive power to support the power grid. This parameter is used to set the reactive power generated by the inverter. This parameter is displayed when **HVRT** is set to **Enable**.
Grid voltage protection shield during VRT	Specifies whether to shield the undervoltage protection function during LVRT or HVRT. This parameter is displayed when **LVRT** or **HVRT** is set to **Enable**.
VRT exit hysteresis threshold	Specifies the LVRT/HVRT recovery threshold. ● This parameter is displayed when **LVRT** or **HVRT** is set to **Enable**. ● LVRT recovery threshold = Threshold for triggering LVRT + VRT exit hysteresis threshold ● HVRT recovery threshold = Threshold for triggering HVRT + VRT exit hysteresis threshold
Grid voltage jump triggering threshold (%)	Specifies the LVRT or HVRT threshold for triggering a transient voltage jump of a power grid. A transient voltage jump indicates that the inverter cannot immediately disconnect from the power grid when the power grid is abnormal due to transient changes.
Zero current due to power grid fault	Certain countries and regions have requirements on the output current during high/low voltage ride-through. In this case, set this parameter to **Enable**. After this parameter is set to **Enable**, the output current is less than 10% of the rated current during high/low voltage ride-through. This parameter is displayed when **LVRT** or **HVRT** is set to **Enable**.

 Copyright © Huawei Technologies Co., Ltd.

Parameter	Description
Active islanding protection	Specifies whether to enable the active islanding protection function.
Voltage rise suppression	The standards of certain countries and regions require that when the output voltage exceeds a certain value, the inverter must suppress voltage rise by outputting reactive power and reducing active power.
Voltage rise suppressing reactive power adjustment point (%)	The standards of certain countries and regions require that the inverter generate a certain amount of reactive power when the output voltage exceeds a certain value. This parameter is displayed when **Voltage rise suppression** is set to **Enable**.
Voltage rise suppressing active power derating point (%)	The standards of certain countries and regions require that the active power of the inverter be derated according to a certain slope when the output voltage exceeds a certain value. ● This parameter is displayed when **Voltage rise suppression** is set to **Enable**. ● The value of **Voltage rise suppressing active power derating point** must be greater than that of **Voltage rise suppressing reactive power adjustment point**.
Automatic OFF due to communication interrupted	The standards of certain countries and regions require that the inverter must shut down after the communication is interrupted for a certain time.
Automatic ON due to communication resumed	If this parameter is set to **Enable**, the inverter automatically starts after communication recovers. If this parameter is set to **Disable**, the inverter needs to be started manually after communication recovers.
Communication interruption duration (min)	Specifies the duration for determining communication interruption. Used for automatic shutdown for protection in case of communication interruption.
Soft start/boot time (s)	Specifies the duration for the power to gradually increase when the inverter starts.
Soft start time after grid failure (s)	Specifies the time for the power to gradually increase when the inverter restarts after the power grid recovers.

----End

7.1.5.4 Setting Power Adjustment Parameters

Procedure

Step 1 Choose **Settings** > **Power adjustment** to set power adjustment parameters.

Figure 7-13 Power adjustment parameters

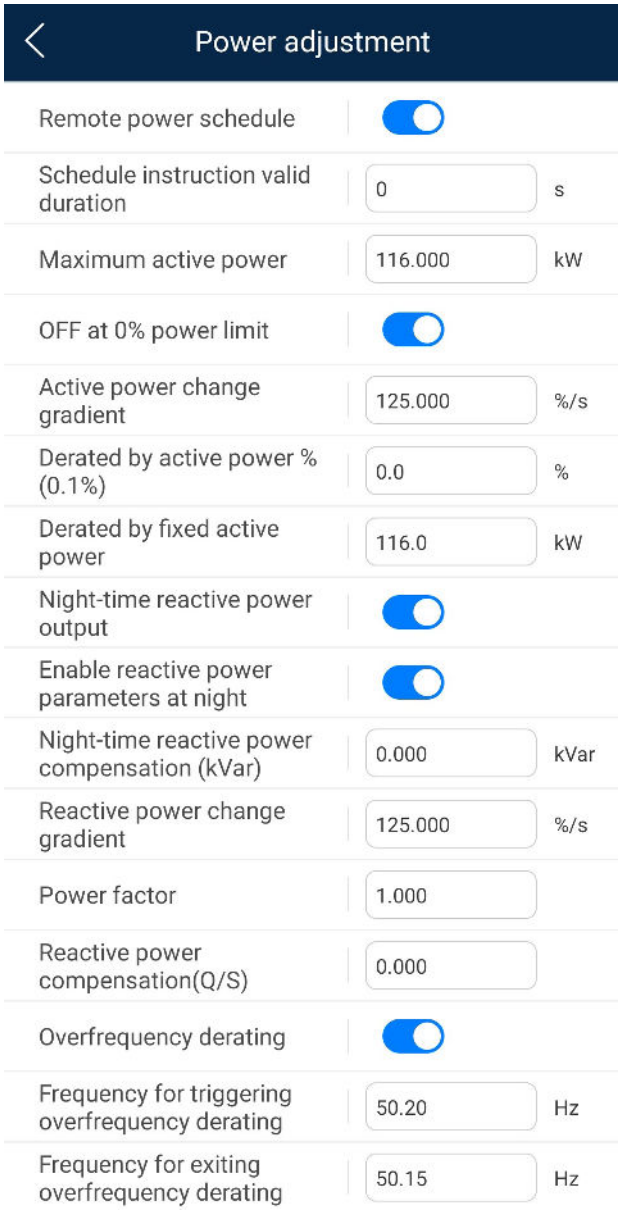

Table 7-7 Power adjustment parameters

Parameter	Description
Remote power schedule	If this parameter is set to **Enable**, the inverter responds to the scheduling instruction from the remote port. If this parameter is set to **Disable**, the inverter does not respond to the scheduling instruction from the remote port.
Schedule instruction valid duration (s)	Specifies the time for maintaining the scheduling instruction. When this parameter is set to 0, the scheduling instruction takes effect permanently.

 Copyright © Huawei Technologies Co., Ltd.

Parameter	Description
Maximum apparent power (kVA)	Specifies the output upper threshold for the maximum apparent power to adapt to the capacity requirements of standard and customized inverters. If the maximum active power equals the value of Smax_limit, this parameter is not displayed.
Maximum active power (kW)	Specifies the output upper threshold for the maximum active power to adapt to different market requirements.
OFF at 0% power limit	If this parameter is set to **Enable**, the inverter shuts down after receiving the 0% power limit command. If this parameter is set to **Disable**, the inverter does not shut down after receiving the 0% power limit command.
Active power change gradient (%/s)	Specifies the change speed of the inverter active power.
Derated by fixed active power (kW)	Adjusts the active power output of the inverter by fixed value. This parameter is displayed if **Remote power schedule** is set to **Enable**.
Derated by active power % (%)	Adjusts the active power output of the inverter by percentage. This parameter is displayed if **Remote power schedule** is set to **Enable**. If this parameter is set to **100**, the inverter outputs based on the maximum output power.
Night-time reactive power output	In some specific application scenarios, a power grid company requires that the inverter can perform reactive power compensation at night to ensure that the power factor of the local power grid meets requirements. This parameter is displayed when **Isolation settings** is set to **Input ungrounded, with TF**.
Enable reactive power parameters at night	When this parameter is set to **Enable**, the inverter outputs reactive power based on the setting of **Reactive power compensation at night**. Otherwise, the inverter executes the remote scheduling command. This parameter is displayed when **Night-time reactive power output** is set to **Enable**.
Night-time reactive power compensation (kVar)	During the reactive power compensation at night, the reactive power is scheduled by fixed value. This parameter is displayed when **Night-time reactive power output** and **Enable reactive power parameters at night** are set to **Enable**.
Reactive power change gradient (%/s)	Specifies the change speed of the inverter reactive power.

 Copyright © Huawei Technologies Co., Ltd.

Parameter	Description
Power factor	Specifies the power factor of the inverter. This parameter is displayed if **Remote power schedule** is set to **Enable**.
Reactive power compensation (Q/S)	Specifies the reactive power output by the inverter. This parameter is displayed if **Remote power schedule** is set to **Enable**.
Overfrequency derating	If this parameter is set to **Enable**, the active power of the inverter will be derated according to a certain slope when the grid frequency exceeds the frequency that triggers overfrequency derating.
Frequency for triggering overfrequency derating (Hz)	The standards of certain countries and regions require that the output active power of inverters be derated when the power grid frequency exceeds a certain value. This parameter is displayed when **Overfrequency derating** is set to **Enable**.
Frequency for exiting overfrequency derating (Hz)	Specifies the frequency threshold for exiting overfrequency derating. This parameter is displayed when **Overfrequency derating** is set to **Enable**.
Cutoff frequency of overfrequency derating (Hz)	Specifies the frequency threshold for cutting off overfrequency derating. ● This parameter is displayed when **Overfrequency derating** is set to **Enable**. ● When setting this parameter, ensure that the following condition is met: **Frequency for exiting overfrequency derating** ≤ **Frequency for triggering overfrequency derating** < **Cutoff frequency of overfrequency derating**.
Cutoff power of overfrequency derating (%)	Specifies the power threshold for cutting off overfrequency derating. This parameter is displayed when **Overfrequency derating** is set to **Enable**.
Power recovery gradient of overfrequency derating (%/min)	Specifies the recovery rate of the overfrequency derating power. This parameter is displayed when **Overfrequency derating** is set to **Enable**.
PF (U) voltage detection filtering time (s)	Specifies the time for filtering the grid voltage in the PF-U curve.
Apparent power baseline (kVA)	Adjust the apparent output baseline of the inverter.
Active power baseline (kW)	Adjusts the active output baseline of the inverter.

 Copyright © Huawei Technologies Co., Ltd.

Parameter	Description
Communication disconnection fail-safe	In the inverter export limitation scenario, if this parameter is set to **Enable**, the inverter will perform active power derating by percentage when the communication between the inverter and the SmartLogger or Smart Dongle is disconnected for more than the time specified by **Communication disconnection detection time**.
Communication disconnection detection time (s)	Specifies the fail-safe detection time for the disconnection between the inverter and the SmartLogger or Smart Dongle.
Active power output limit for fail-safe (%)	Specifies the derating value of the inverter active power by percentage.
Underfrequency rise power	The standards of certain countries and regions require that if the power grid frequency is lower than **Frequency for triggering of underfrequency rise power**, the inverter needs to increase the active power output to help increase the power grid frequency. In this case, set this parameter to **Enable**.
Frequency for triggering of underfrequency rise power (Hz)	Specifies the frequency threshold of **Underfrequency rise power**. This parameter is displayed when **Underfrequency rise power** is set to **Enable**.
Power recovery gradient of underfrequency rise (%/min)	Specifies the recovery rate of **Underfrequency rise power**. This parameter is displayed when **Underfrequency rise power** is set to **Enable**.
Cutoff frequency of underfrequency rise power (Hz)	Specifies the cutoff frequency of **Underfrequency rise power**. This parameter is displayed when **Underfrequency rise power** is set to **Enable**.
Cutoff power of underfrequency rise power (%)	Specifies the cutoff power of **Underfrequency rise power**. This parameter is displayed when **Underfrequency rise power** is set to **Enable**.
Frequency for exiting of underfrequency rise power (Hz)	Specifies the exit frequency of **Underfrequency rise power**. This parameter is displayed when **Underfrequency rise power** is set to **Enable**.
Q-U characteristic curve mode	Specifies the reactive power compensation mode of the inverter output.
Power percentage for triggering Q-U scheduling	Specifies the reference apparent power, in percentage. When the actual apparent power of the inverter is greater than the value of this parameter, the Q-U characteristic curve scheduling function is enabled.

 Copyright © Huawei Technologies Co., Ltd.

Parameter	Description
Q-U characteristic curve	The inverter adjusts Q/S (the ratio of the output reactive power to apparent power) in real time based on U/Un(%) (the ratio of the actual power grid voltage to the rated power grid voltage).
Q-P characteristic curve	The inverter adjusts Q/Pn (the ratio of the output reactive power to the rated active power) in real time based on P/Pn(%) (the ratio of the actual active power to the rated active power).
Cosϕ-P/Pn characteristic curve	The inverter adjusts the output power factor cosϕ in real time based on P/Pn(%).

----End

7.2 Operations with a USB Flash Drive

USB flash drives of SanDisk, Netac, or Kingston are supported. Other USB flash drives may not be identified because they are not tested for compatibility.

NOTE

Delete the script file immediately after use to reduce information disclosure risks.

7.2.1 Exporting Configurations

Procedure

1. Click **Local maintenance script** on the app to generate a boot script file, see the *FusionSolar APP and SUN2000 APP User Manual*.
2. Import the boot script file to a PC.

   (Optional) The boot script file can be opened as a .txt file.

Figure 7-14 Boot script file

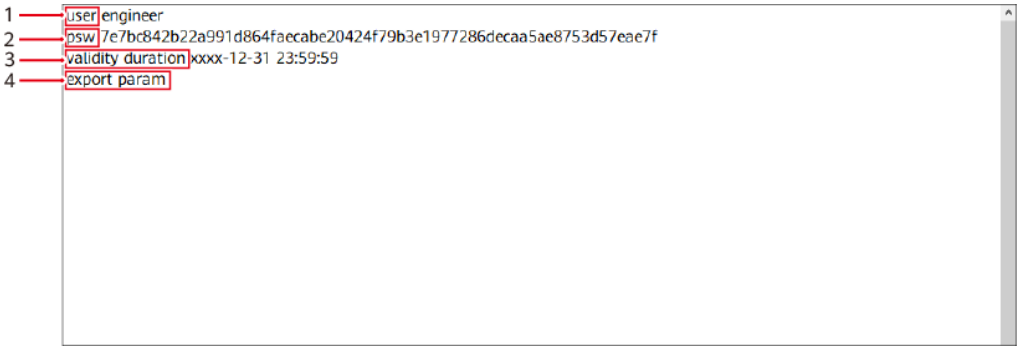

No.	Meaning	Remarks
1	User name	• Advanced user: engineer • Special user: admin
2	Ciphertext	The ciphertext varies depending on the login password of the SUN2000 app or entering the **Device Commissioning** screen on the FusionSolar app.
3	Script validity period	-
4	Command	Different command settings can produce different commands. • Configuration export command: export param. • Configuration import command: import param. • Data export command: export log. • Upgrade command: upgrade.

3. Import the boot script file to the root directory of a USB flash drive.
4. Connect the USB flash drive to the USB port. The system automatically identifies the USB flash drive and executes all commands specified in the boot script file. View the LED indicator to determine the operating status.

NOTICE

Ensure that the ciphertext in the boot script matches the login password for logging in to the SUN2000 app or entering the Device Commissioning screen on the FusionSolar app. Otherwise, the user account will be locked for 10 minutes after the USB flash drive is inserted for five consecutive times.

Table 7-8 LED indicator description

LED Indicator	Status	Meaning
	Green off	There is no operation with a USB flash drive.
	Blinking green slowly	There is an operation with a USB flash drive.
	Blinking green fast	An operation with a USB flash drive has failed.
	Steady green	An operation with a USB flash drive is successful.

 Copyright © Huawei Technologies Co., Ltd.

5. Insert the USB flash drive into a computer and check the exported data.

NOTE

When the configuration export is complete, the boot script file and exported file are in the root directory of the USB flash drive.

7.2.2 Importing Configurations

Prerequisites

A complete configuration file has been exported.

Procedure

1. Click **Local maintenance script** on the app to generate a boot script file, see the *FusionSolar APP and SUN2000 APP User Manual*.
2. Import the boot script file to a PC.
3. Replace the exported boot script file in the root directory of the USB flash drive with the imported one.

NOTICE

Replace the boot script file only and keep the exported files.

4. Connect the USB flash drive to the USB port. The system automatically identifies the USB flash drive and executes all commands specified in the boot script file. View the LED indicator to determine the operating status.

NOTICE

Ensure that the ciphertext in the boot script matches the login password for logging in to the SUN2000 app or entering the Device Commissioning screen on the FusionSolar app. Otherwise, the user account will be locked for 10 minutes after the USB flash drive is inserted for five consecutive times.

 Copyright © Huawei Technologies Co., Ltd.

Table 7-9 LED indicator description

LED Indicator	Status	Meaning
	Green off	There is no operation with a USB flash drive.
	Blinking green slowly	There is an operation with a USB flash drive.
	Blinking green fast	An operation with a USB flash drive has failed.
	Steady green	An operation with a USB flash drive is successful.

7.2.3 Exporting Data

Procedure

1. Click **Local maintenance script** on the app to generate a boot script file, see the *FusionSolar APP and SUN2000 APP User Manual*.
2. Import the boot script file to the root directory of a USB flash drive.
3. Connect the USB flash drive to the USB port. The system automatically identifies the USB flash drive and executes all commands specified in the boot script file. View the LED indicator to determine the operating status.

NOTICE

Ensure that the ciphertext in the boot script matches the login password for logging in to the SUN2000 app or entering the Device Commissioning screen on the FusionSolar app. Otherwise, the user account will be locked for 10 minutes after the USB flash drive is inserted for five consecutive times.

 Copyright © Huawei Technologies Co., Ltd.

Table 7-10 LED indicator description

LED Indicator	Status	Meaning
	Green off	There is no operation with a USB flash drive.
	Blinking green slowly	There is an operation with a USB flash drive.
	Blinking green fast	An operation with a USB flash drive has failed.
	Steady green	An operation with a USB flash drive is successful.

7.2.4 Upgrading

Procedure

1. Download the required software upgrade package from the technical support website.
2. Decompress the upgrade package.

   NOTE

   If the login password for logging into the SUN2000 app or entering the **Device Commissioning** screen on the FusionSolar app is the initial password, you do not need to perform steps 3 to 5. If not, perform steps 3 to 7.
3. Click **Local maintenance script** on the app to generate a boot script file, see the *FusionSolar APP and SUN2000 APP User Manual*.
4. Import the boot script file to a PC.
5. Replace the boot script file (sun_lmt_mgr_cmd.emap) in the upgrade package with the one generated by the app.
6. Copy the extracted files to the root directory of the USB flash drive.
7. Connect the USB flash drive to the USB port. The system automatically identifies the USB flash drive and executes all commands specified in the boot script file. View the LED indicator to determine the operating status.

NOTICE

Ensure that the ciphertext in the boot script matches the login password for logging in to the SUN2000 app or entering the Device Commissioning screen on the FusionSolar app. Otherwise, the user account will be locked for 10 minutes after the USB flash drive is inserted for five consecutive times.

 Copyright © Huawei Technologies Co., Ltd.

Table 7-11 LED indicator description

LED Indicator	Status	Meaning
	Green off	There is no operation with a USB flash drive.
	Blinking green slowly	There is an operation with a USB flash drive.
	Blinking green fast	An operation with a USB flash drive has failed.
	Steady green	An operation with a USB flash drive is successful.

8. The system automatically restarts when the upgrade is completed. All LED indicators are off during the restart. After the restart, the indicator is blinking green slowly for 1 minute and then it becomes steady green, which indicates that the upgrade is successful.

 Copyright © Huawei Technologies Co., Ltd.

8 Maintenance

8.1 Powering Off the SUN2000

Context

WARNING

- If two SUN2000s share the same AC switch on the AC side, power off the two SUN2000s.
- After the SUN2000 powers off, the remaining electricity and heat may still cause electric shocks and body burns. Therefore, put on protective gloves and begin servicing the SUN2000 15 minutes after the power-off.

Procedure

Step 1 Run a shutdown command on the app, SmartLogger, or NMS.

For details, see **7 Man-Machine Interactions**, or the SmartLogger or NMS user manual.

Step 2 Turn off the AC switch between the SUN2000 and the power grid.

Step 3 Set all DC switches to OFF.

NOTE

For the SUN2000-90KTL-H2 used in Australia, install the delivered screw for locking each DC switch.

----End

 Copyright © Huawei Technologies Co., Ltd.

8.2 Power-Off for Troubleshooting

Context

To prevent personal injury and equipment damage, perform the following procedure to power off the solar inverter for troubleshooting or replacement.

CAUTION

- When a solar inverter is faulty, try to avoid standing in front of the solar inverter.
- Do not operate the DC switch on the solar inverter before you finish **Step 3** to **Step 5**.
- If the AC switch between the solar inverter and the power grid has automatically disconnected, do not turn on the switch before the fault is rectified.
- Before power-off for troubleshooting, do not touch the energized components of the solar inverter. Otherwise, electric shocks or arcing may occur.

Procedure

Step 1 Wear proper personal protective equipment (PPE).

Step 2 If the solar inverter is not shut down due to a fault, send a shutdown command on the app, SmartLogger, or management system. If the solar inverter has shut down due to a fault, go to the next step.

Step 3 Turn off the AC switch between the solar inverter and the power grid.

Step 4 Measure the DC current of each PV input string using a clamp meter that is set to the DC position.

- If the current is less than or equal to 0.5 A, go to the next step.
- If the current is higher than 0.5 A, wait until the solar irradiance decreases and the PV string current decreases below 0.5 A at night, and then go to the next step.

Step 5 Open the maintenance compartment door, install a support bar, and use a multimeter to measure the voltage between the AC terminal block and the ground. Ensure that the AC side of the solar inverter is disconnected.

Step 6 Turn off all DC input switches of the solar inverter.

NOTE

For the SUN2000-90KTL-H2 used in Australia, install the delivered screw for locking each DC switch.

Step 7 Wait for 15 minutes and troubleshoot or repair the inverter.

 Copyright © Huawei Technologies Co., Ltd.

WARNING

- Do not open the host panel for maintenance if the solar inverter is emitting odor or smoke, or has obvious exceptions.
- If the solar inverter does not emit odor or smoke and is intact, repair or restart it based on the alarm handling suggestions. Do not stand in front of the solar inverter during the restart.

----End

8.3 Routine Maintenance

To ensure that the SUN2000 can operate properly for a long term, you are advised to perform routine maintenance on it as described in this chapter.

CAUTION

- Before cleaning the system, and maintaining the cable connections and grounding reliability, power off the system (see **8.1 Powering Off the SUN2000**) and ensure that the two DC switches on the SUN2000 are OFF.
- If you need to open the maintenance compartment door in rainy or snowy days, take protective measures to prevent rain and snow entering the maintenance compartment. If it is impossible to take protective measures, do not open the maintenance compartment door in rainy or snowy days.

Table 8-1 Maintenance list

Item	Check Method	Maintenance Interval
System cleanliness	Check periodically that the heat sinks are free from obstacles or dust.	Once six months to a year
System running status	• Check that the SUN2000 is not damaged or deformed. • Check that the running sound of the SUN2000 is normal. • When the SUN2000 is running, check that all SUN2000 parameters are correctly set.	Once six months

 Copyright © Huawei Technologies Co., Ltd.

Item	Check Method	Maintenance Interval
Cable connections	• Check that cables are securely connected. • If clamps are used for AC cable connections, check that they are secured with a torque of 35 N·m. • Check that cables are intact, in particular, the parts touching the metallic surface are not scratched. • Check whether the sealing caps of idle DC input terminals fall off. • Check that the cover on the USB port is tightened. • Check that idle RESERVE and COM waterproof connectors are plugged and the locking caps are tightened.	The first inspection is half a year after the initial commissioning. From then on, perform the inspection once six months to a year.
Grounding reliability	Check that ground cables are securely connected.	The first inspection is half a year after the initial commissioning. From then on, perform the inspection once six months to a year.

8.4 Troubleshooting

Alarm severities are defined as follows:

- Major: The inverter is faulty. As a result, the output power decreases or the grid-tied power generation is stopped.
- Minor: Some components are faulty without affecting the grid-tied power generation.
- Warning: The inverter works properly. The output power decreases or some authorization functions fail due to external factors.

 Copyright © Huawei Technologies Co., Ltd.

Table 8-2 Common alarms and troubleshooting measures

Alarm ID	Alarm Name	Alarm Severity	Cause	Measures
2001	High string input voltage	Major	The PV array is incorrectly configured. Excessive PV modules are connected in series to the PV string, and hence the PV string open-circuit voltage exceeds the maximum operating voltage of the SUN2000. ● Cause ID = 1 corresponds to PV strings 1 and 2. ● Cause ID = 2 corresponds to PV strings 3 and 4. ● Cause ID = 3 corresponds to PV strings 5 and 6. ● Cause ID = 4 corresponds to PV strings 7 and 8. ● Cause ID = 5 corresponds to PV strings 9 and 10. ● Cause ID = 6 corresponds to PV strings 11 and 12.	Reduce the number of PV modules connected in series to the PV string until the PV string open-circuit voltage is less than or equal to the maximum operating voltage of the SUN2000. After the PV array configuration is corrected, the alarm stops.
2011	String Reverse Connection	Major	The PV string is reversely connected. Cause IDs 1 to 12 respectively correspond to PV strings 1 to 12.	Check whether the PV string is reversely connected to the SUN2000. If yes, wait until the solar irradiance declines at night and the PV string current reduces to below 0.5 A. Then, turn off the two DC switches and correct the PV string connection.

 Copyright © Huawei Technologies Co., Ltd.

Alarm ID	Alarm Name	Alarm Severity	Cause	Measures
2012	String current backfeed	Warning	1. Only a few PV modules are connected in series to the PV string, and hence the end voltage is lower than that of other PV strings. 2. The PV string is shaded. Cause IDs 1 to 12 respectively correspond to PV strings 1 to 12.	1. Check whether the number of PV modules connected in series to this PV string is less than the number of PV modules connected in series to the other PV strings. If yes, connect more PV modules in series to this PV string. 2. Check the open-circuit voltage of the PV string. 3. Check that the PV string is not shaded.
2013	Abnormal String Power	Warning	1. The PV string has been shaded for a long time. 2. The PV string deteriorates abnormally. Cause IDs 1 to 12 respectively correspond to PV strings 1 to 12.	1. Check whether the current of the abnormal PV string is lower than the current of other PV strings. If yes, check that the abnormal PV string is not shaded and the actual number of PV strings is the same as the configured number. 2. If the abnormal PV string is clean and not shaded, check whether the PV string is damaged.

 Copyright © Huawei Technologies Co., Ltd.

Alarm ID	Alarm Name	Alarm Severity	Cause	Measures
2014	High Input String Voltage to Ground	Major	Cause ID = 1 The voltage between the input PV string and the ground is abnormal, and there is a risk of power attenuation.	1. If no PID compensation device exists in the system, disable the PID protection function at night, which will cause PV module attenuation if the reactive power output function at night is enabled for the inverter. 2. If there is a PID compensation device in the system, check whether it is faulty. If so, rectify the fault. 3. Check whether the compensation direction settings of the inverter and the PID compensation device are the same. If not, set the parameters based on the PV module type and ensure that they are the same. 4. If the alarm persists, contact Huawei technical support.
2031	Phase Wire Short-Circuited to PE	Major	Cause ID = 1 The impedance of the output phase wire to PE is low or the output phase wire is short-circuited to PE.	Check the impedance of the output phase wire to PE, locate the position with lower impedance, and rectify the fault.
2032	Grid Loss	Major	Cause ID = 1 1. The power grid experiences an outage. 2. The AC circuit is disconnected or AC switch is off.	1. The alarm disappears automatically after the power grid recovers. 2. Check that the AC power cable is connected and that the AC switch is ON.

 Copyright © Huawei Technologies Co., Ltd.

Alarm ID	Alarm Name	Alarm Severity	Cause	Measures
2033	Grid Undervoltage	Major	Cause ID = 1 The grid voltage is below the lower threshold or the low voltage duration has lasted for more than the value specified by LVRT.	1. If the alarm occurs accidentally, the power grid may be abnormal temporarily. The SUN2000 automatically recovers after detecting that the power grid becomes normal. 2. If the alarm occurs frequently, check whether the power grid voltage is within the acceptable range. If no, contact the local power operator. If yes, modify the power grid undervoltage protection threshold with the consent of the local power operator. 3. If the fault persists for a long time, check the AC circuit breaker and AC output power cable.
2034	Grid Overvoltage	Major	Cause ID = 1 The grid voltage exceeds the higher threshold or the high voltage duration has lasted for more than the value specified by HVRT.	1. Check whether the grid connection voltage exceeds the upper threshold. If yes, contact the local power operator. 2. If you have confirmed that the grid connection voltage exceeds the upper threshold and obtained the consent of the local power operator, modify the overvoltage protection threshold. 3. Check that the peak grid voltage does not exceed the upper threshold.

 Copyright © Huawei Technologies Co., Ltd.

Alarm ID	Alarm Name	Alarm Severity	Cause	Measures
2035	Grid Voltage Imbalance	Major	Cause ID = 1 The difference between grid phase voltages exceeds the upper threshold.	1. Check that the grid voltage is within the normal range. 2. Check the connection of the AC output power cable. If the cable connection is proper but the alarm occurs frequently and affects the power production of the PV plant, contact the local power operator.
2036	Grid Overfrequency	Major	Cause ID = 1 Power grid exception: The actual grid frequency is higher than the requirement of the local power grid standard.	1. If the alarm occurs accidentally, the power grid may be abnormal temporarily. The SUN2000 automatically recovers after detecting that the power grid becomes normal. 2. If the alarm occurs frequently, check whether the grid frequency is within the acceptable range. If no, contact the local power operator. If yes, modify the power grid overfrequency protection threshold with the consent of the local power operator.

 Copyright © Huawei Technologies Co., Ltd.

Alarm ID	Alarm Name	Alarm Severity	Cause	Measures
2037	Grid Underfrequency	Major	Cause ID = 1 Power grid exception: The actual power grid frequency is lower than the standard requirement for the local power grid.	1. If the alarm occurs accidentally, the power grid may be abnormal temporarily. The SUN2000 automatically recovers after detecting that the power grid becomes normal. 2. If the alarm occurs frequently, check whether the grid frequency is within the acceptable range. If no, contact the local power operator. If yes, modify the power grid underfrequency protection threshold with the consent of the local power operator.
2038	Unstable Grid Frequency	Major	Cause ID = 1 Power grid exception: The actual grid frequency change rate does not comply with the local power grid standard.	1. If the alarm occurs accidentally, the power grid may be abnormal temporarily. The SUN2000 automatically recovers after detecting that the power grid becomes normal. 2. If the alarm occurs frequently, check whether the grid frequency is within the acceptable range. If no, contact the local power operator.

 Copyright © Huawei Technologies Co., Ltd.

Alarm ID	Alarm Name	Alarm Severity	Cause	Measures
2039	Output Overcurrent	Major	Cause ID = 1 The power grid voltage drops dramatically or the power grid is short-circuited. As a result, the inverter transient output current exceeds the upper threshold and therefore the inverter protection is triggered.	1. The inverter detects its external working conditions in real time. After the fault is rectified, the inverter automatically recovers. 2. If the alarm occurs frequently and affects the power production of the PV plant, check whether the output is short-circuited. If the fault persists, contact Huawei technical support.
2040	Output DC Component Overhigh	Major	Cause ID = 1 The DC component of the SUN2000 output current exceeds the specified upper threshold.	1. If the exception is caused by an external fault, the SUN2000 automatically recovers after the fault is rectified. 2. If the alarm occurs frequently and affects the power production of the PV plant, contact Huawei technical support.
2051	Abnormal Residual Current	Major	Cause ID = 1 The insulation impedance of the input side to PE decreases when the SUN2000 is operating.	1. If the alarm occurs accidentally, the external power cable may be abnormal temporarily. The SUN2000 automatically recovers after the fault is rectified. 2. If the alarm occurs frequently or persists, check that the impedance between the PV string and ground is not below the lower threshold.

 Copyright © Huawei Technologies Co., Ltd.

Alarm ID	Alarm Name	Alarm Severity	Cause	Measures
2062	Low Insulation Resistance	Major	Cause ID = 1 1. The PV string is short-circuited to PE. 2. The PV string has been in a moist environment for a long time and the power cable is not well insulated to ground.	1. Check the impedance between the PV string and the PE cable. If a short circuit occurs, rectify the fault. 2. Check that the PE cable for the SUN2000 is correctly connected. 3. If you are sure that the impedance is less than the default value in a cloudy or rainy environment, reset **Insulation resistance protection**.
2063	Cabinet Overtemperature	Minor	Cause ID = 1 1. The SUN2000 is installed in a place with poor ventilation. 2. The ambient temperature exceeds the upper threshold. 3. The SUN2000 is not working properly.	1. Check the ventilation and ambient temperature at the SUN2000 installation position. If the ventilation is poor or the ambient temperature exceeds the upper threshold, improve the ventilation and heat dissipation. 2. If the ventilation and ambient temperature both meet requirements, contact Huawei technical support.
2064	Device Fault	Major	Cause ID = 1–15 An unrecoverable fault occurs on a circuit inside the SUN2000.	Turn off the AC output switch and DC input switch, and then turn them on after 15 minutes. If the fault persists, contact Huawei technical support. **NOTE** Cause ID = 1: Perform the preceding operations when the PV string current is less than 1 A.

 Copyright © Huawei Technologies Co., Ltd.

Alarm ID	Alarm Name	Alarm Severity	Cause	Measures
2065	Upgrade Failed	Minor	Cause ID = 1–4 The upgrade ends abnormally.	1. Perform an upgrade again. 2. If the upgrade fails several times, contact your dealer.
2066	License Expired	Warning	Cause ID = 1 1. The privilege certificate has entered the grace period. 2. The privilege feature will be invalid soon.	1. Apply for a new certificate. 2. Load the new certificate.
61440	Faulty Monitoring Unit	Minor	Cause ID = 1 1. The flash memory is insufficient. 2. The flash memory has bad sectors.	Turn off the AC output switch and DC input switch, and then turn them on after 15 minutes. If the fault persists, replace the monitoring board or contact Huawei technical support.

NOTE

Contact Huawei technical support if all failure analysis procedures listed above are completed and the fault still exists.

 Copyright © Huawei Technologies Co., Ltd.

9 Handling the Inverter

9.1 Removing the SUN2000

NOTICE

Before removing the SUN2000, disconnect both AC and DC connections.

Perform the following operations to remove the SUN2000:

1. Disconnect all cables from the SUN2000, including RS485 communications cables, DC input power cables, AC output power cables, and PGND cables.
2. Remove the SUN2000 from the mounting bracket.
3. Remove the mounting bracket.

9.2 Packing the SUN2000

- If the original packing materials are available, put the SUN2000 inside them and then seal them by using adhesive tape.
- If the original packing materials are not available, put the SUN2000 inside a suitable cardboard box and seal it properly.

9.3 Disposing of the SUN2000

If the SUN2000 service life expires, dispose of it according to the local disposal rules for electrical equipment waste.

 Copyright © Huawei Technologies Co., Ltd.

10 Technical Data

10.1 SUN2000-(90KTL, 95KTL) Series Technical Data

Efficiency

Item	SUN2000-90KTL-H0	SUN2000-90KTL-H1	SUN2000-90KTL-H2	SUN2000-95KTL-INH0	SUN2000-95KTL-INH1
Maximum efficiency	99.00%				
Chinese efficiency	-	-	-	-	-
EU efficiency	98.80%	98.80%	98.80%	98.80%	98.80%

Input

Item	SUN2000-90KTL-H0	SUN2000-90KTL-H1	SUN2000-90KTL-H2	SUN2000-95KTL-INH0	SUN2000-95KTL-INH1
Maximum input power	102,000 W	102,000 W	102,000 W	102,000 W	112,200 W
Maximum input voltage	1500 V	1500 V	1500 V	1500 V	1500 V
Lowest operating/startup voltage	600/650 V				
Operating voltage range	600–1500 V				

 Copyright © Huawei Technologies Co., Ltd.

Item	SUN2000-90KTL-H0	SUN2000-90KTL-H1	SUN2000-90KTL-H2	SUN2000-95KTL-INH0	SUN2000-95KTL-INH1
Full-load MPPT voltage range	880–1300 V				
Rated input voltage	1080 V				
Maximum input current (per MPPT)	22 A	22 A	25 A	22 A	25 A
Maximum short-circuit current (per MPPT)	33 A				
Maximum backfeed current to the PV array	0 A				
Number of inputs	12				
Number of MPP trackers	6				

Output

Item	SUN2000-90KTL-H0	SUN2000-90KTL-H1	SUN2000-90KTL-H2	SUN2000-95KTL-INH0	SUN2000-95KTL-INH1
Rated active power	90 kW	90 kW	90 kW	90 kW	90 kW
Maximum apparent power	100 kVA	100 kVA	100 kVA	100 kVA	110 kVA
Maximum active power (cosϕ = 1)	100 kW	100 kW	100 kW	100 kW	110 kW
Rated output voltage	800 V AC, 3W+PE				
Rated output current	65.0 A	65.0 A	65.0 A	65.0 A	65.0 A

 Copyright © Huawei Technologies Co., Ltd.

Item	SUN2000-90 KTL-H0	SUN2000-90 KTL-H1	SUN2000-90 KTL-H2	SUN2000-95 KTL-INH0	SUN2000-95 KTL-INH1
Adapted power grid frequency	50/60 Hz				
Maximum output current	72.9 A	72.9 A	72.9 A	72.9 A	80.2 A
Power factor	0.8 leading... 0.8 lagging				
Maximum total harmonic distortion (rated power)	< 3%				

Protection

Item	SUN2000-90 KTL-H0	SUN2000-90 KTL-H1	SUN2000-90 KTL-H2	SUN2000-95 KTL-INH0	SUN2000-95 KTL-INH1
Input DC switch	Supported				
Anti-islanding protection	Supported				
Output overcurrent protection	Supported				
Input reverse connection protection	Supported				
PV string fault detection	Supported				
DC surge protection	Type II				
AC surge protection	Type II				
Insulation resistance detection	Supported				
Residual current monitoring	Supported				

 Copyright © Huawei Technologies Co., Ltd.

Display and Communication

Item	SUN2000-90 KTL-H0	SUN2000-90 KTL-H1	SUN2000-90 KTL-H2	SUN2000-95 KTL-INH0	SUN2000-95 KTL-INH1
Display	LED indicator, Bluetooth module+app, USB data cable+app, and WLAN module +app				
RS485	Supported				
MBUS	Supported				

Common Parameters

Item	SUN2000-90 KTL-H0	SUN2000-90 KTL-H1	SUN2000-90 KTL-H2	SUN2000-95 KTL-INH0	SUN2000-95 KTL-INH1
Dimensions (W x H x D)	1075 mm x 605 mm x 310 mm				
Net weight	76±1 kg	76±1 kg	79±1 kg	76±1 kg	79±1 kg
Operating temperature	–25°C to +60°C				
Cooling mode	Natural convection				
Highest operating altitude	4000 m				
Operating relative humidity	0%–100% RH				
Input terminal	Amphenol UTX		Amphenol UTX/Staubli MC4 EVO2	Amphenol UTX	
Output terminal	Cable gland + OT/DT terminal				
Overvoltage level	II (DC)/III (AC)				
IP rating	IP65				
Protection level	I				
Pollution degree	III				

 Copyright © Huawei Technologies Co., Ltd.

10.2 SUN2000-(100KTL, 105KTL) Series Technical Data

Efficiency

Item	SUN2000-100KTL-H0	SUN2000-100KTL-H1	SUN2000-100KTL-H2	SUN2000-105KTL-H1
Maximum efficiency	99.00%			
Chinese efficiency	98.55%	-	98.55%	-
EU efficiency	98.80%	98.80%	98.80%	98.80%

Input

Item	SUN2000-100KTL-H0	SUN2000-100KTL-H1	SUN2000-100KTL-H2	SUN2000-105KTL-H1
Maximum input power	112,200 W	107,100 W	112,200 W	118,400 W
Maximum input voltage	1500 V	1500 V	1500 V	1500 V
Lowest operating/startup voltage	600/650 V			
Operating voltage range	600–1500 V			
Full-load MPPT voltage range	880–1300 V			
Rated input voltage	1080 V			
Maximum input current (per MPPT)	22 A	22 A	25 A	25 A
Maximum short-circuit current (per MPPT)	33 A			
Maximum backfeed current to the PV array	0 A			
Number of inputs	12			

 Copyright © Huawei Technologies Co., Ltd.

Item	SUN2000-100KTL-H0	SUN2000-100KTL-H1	SUN2000-100KTL-H2	SUN2000-105KTL-H1
Number of MPP trackers	6			

Output

Item	SUN2000-100KTL-H0	SUN2000-100KTL-H1	SUN2000-100KTL-H2	SUN2000-105KTL-H1
Rated active power	100 kW	100 kW	100 kW	105 kW
Maximum apparent power	110 kVA	105 kVA	110 kVA	116 kVA
Maximum active power (cosϕ = 1)	110 kW	105 kW	110 kW	116 kW
Rated output voltage	800 V AC, 3W+PE			
Rated output current	72.2 A	72.2 A	72.2 A	75.8 A
Adapted power grid frequency	50 Hz/60 Hz			
Maximum output current	80.2 A	80.2 A	80.2 A	84.6 A
Power factor	0.8 leading... 0.8 lagging			
Maximum total harmonic distortion (rated power)	< 3%			

Protection

Item	SUN2000-100KTL-H0	SUN2000-100KTL-H1	SUN2000-100KTL-H2	SUN2000-105KTL-H1
Input DC switch	Supported			
Anti-islanding protection	Supported			
Output overcurrent protection	Supported			

 Copyright © Huawei Technologies Co., Ltd.

Item	SUN2000-100KTL-H0	SUN2000-100KTL-H1	SUN2000-100KTL-H2	SUN2000-105KTL-H1
Input reverse connection protection	Supported			
PV string fault detection	Supported			
DC surge protection	Type II			
AC surge protection	Type II			
Insulation resistance detection	Supported			
Residual current monitoring	Supported			

Display and Communication

Item	SUN2000-100KTL-H0	SUN2000-100KTL-H1	SUN2000-100KTL-H2	SUN2000-105KTL-H1
Display	LED indicator, Bluetooth module+app, USB data cable+app, and WLAN module+app			
RS485	Supported			
MBUS	Supported			

Common Parameters

Item	SUN2000-100KTL-H0	SUN2000-100KTL-H1	SUN2000-100KTL-H2	SUN2000-105KTL-H1
Dimensions (W x H x D)	1075 mm x 605 mm x 310 mm			
Net weight	76±1 kg	76±1 kg or 79±1 kg[a]	79±1 kg	79±1 kg
Operating temperature	–25°C to +60°C			
Cooling mode	Natural convection			

 Copyright © Huawei Technologies Co., Ltd.

Item	SUN2000-100KTL-H0	SUN2000-100KTL-H1	SUN2000-100KTL-H2	SUN2000-105KTL-H1
Highest operating altitude	4000 m			
Operating relative humidity	0%–100% RH			
Input terminal	Amphenol UTX			
Output terminal	Cable gland + OT/DT terminal			
Overvoltage level	II (DC)/III (AC)			
IP rating	IP65			
Protection level	I			
Pollution degree	III			
Note a: The net weight of the SUN2000-100KTL-H1 with the BOM number of 01074282-001 is 79 kg ±1 kg, and that of other BOM numbers is 76 kg ±1 kg.				

 Copyright © Huawei Technologies Co., Ltd.

A Domain Name List of Management Systems

NOTE

The list is subject to change.

Table A-1 Domain names of management systems

Domain Name	Data Type	Scenario
intl.fusionsolar.huawei.com	Public IP address	FusionSolar hosting cloud **NOTE** The domain name is compatible with cn.fusionsolar.huawei.com (Chinese mainland).

 Copyright © Huawei Technologies Co., Ltd.

B Grid Codes

Set the correct grid code based on the application area and scenario of the SUN2000.

Table B-1 Grid codes

No.	Grid Code	Remarks	SUN2000-90KTL-H0	SUN2000-90KTL-H1	SUN2000-90KTL-H2	SUN2000-95KTL-INH0/95KTL-INH1	SUN2000-100KTL-H0/100KTL-H2	SUN2000-100KTL-H1	SUN2000-105KTL-H1
1	CHINA_MV800	China medium-voltage power grid	-	-	-	-	Supported	-	-
2	G59-England-MV800	G59 medium-voltage power grid	-	Supported	Supported	-	-	Supported	Supported
3	AS4777-MV800	Australia medium-voltage power grid	-	Supported	Supported	-	-	-	-
4	INDIA-MV800	India medium-voltage power grid	Supported	Supported	Supported	Supported	-	Supported	Supported

 Copyright © Huawei Technologies Co., Ltd.

No.	Grid Code	Remarks	SUN2000-90KTL-H0	SUN2000-90KTL-H1	SUN2000-90KTL-H2	SUN2000-95KTL-INH0/95KTL-INH1	SUN2000-100KTL-H0/100KTL-H2	SUN2000-100KTL-H1	SUN2000-105KTL-H1
5	IEC61727-MV800	IEC61727 medium-voltage power grid (50 Hz)	Supported	Supported	Supported	Supported	-	Supported	Supported
6	ABNT NBR 16149-MV800	Brazil medium-voltage power grid	-	-	-	-	-	Supported	Supported
7	UTE C 15-712-1-MV800	France medium-voltage power grid	-	-	-	-	-	Supported	Supported
8	Chile-MV800	Chile medium-voltage power grid	-	-	-	-	-	Supported	Supported
9	Mexico-MV800	Mexico medium-voltage power grid	-	-	-	-	-	Supported	Supported
10	TAI-PEA-MV800	Thailand PEA medium-voltage power grid	-	-	-	-	-	-	Supported
11	Philippines-MV800	Philippines medium-voltage power grid	-	-	-	-	-	-	Supported

 Copyright © Huawei Technologies Co., Ltd.

No.	Grid Code	Remarks	SUN2000-90KTL-H0	SUN2000-90KTL-H1	SUN2000-90KTL-H2	SUN2000-95KTL-INH0/95KTL-INH1	SUN2000-100KTL-H0/100KTL-H2	SUN2000-100KTL-H1	SUN2000-105KTL-H1
12	Malaysian-MV800	Malaysia medium-voltage power grid	-	Supported	Supported	-	-	-	-
13	SA_RPPs-MV800	South Africa RPPs medium-voltage power grid	-	Supported	Supported	-	-	Supported	Supported
14	Jordan-Transmission-MV800	Jordan power transmission network medium-voltage power grid	-	Supported	Supported	-	-	-	Supported
15	DUBAI-MV800	Dubai medium-voltage power grid	-	Supported	Supported	-	-	Supported	Supported
16	SAUDI-MV800	Saudi Arabia medium-voltage power grid	Supported	Supported	Supported	-	-	-	Supported
17	CLC/TS50549_IE-MV800	Ireland medium-voltage power grid (CLC/TS50549)	-	-	-	-	-	Supported	Supported

 Copyright © Huawei Technologies Co., Ltd.

No.	Grid Code	Remarks	SUN2000-90KTL-H0	SUN2000-90KTL-H1	SUN2000-90KTL-H2	SUN2000-95KTL-INH0/95KTL-INH1	SUN2000-100KTL-H0/100KTL-H2	SUN2000-100KTL-H1	SUN2000-105KTL-H1
18	Northern Ireland-MV800	Northern Ireland medium-voltage power grid	-	-	-	-	-	Supported	Supported
19	CEI0-21-MV800	Italy medium-voltage power grid (CEI0-21)	-	-	-	-	-	Supported	Supported
20	IEC 61727-MV800-60Hz	IEC61727 medium-voltage power grid (60 Hz)	Supported	Supported	Supported	Supported	-	Supported	Supported
21	Pakistan-MV800	Pakistan medium-voltage power grid	-	Supported	Supported	-	-	-	-
22	BRASIL-ANEEL-MV800	Brazil medium-voltage power grid	-	-	-	-	-	Supported	Supported
23	EN50438-TR-MV800	Turkey medium-voltage power grid	-	-	-	-	-	Supported	Supported
24	Israel-MV800	Israel medium-voltage power grid	-	Supported	-	-	-	-	Supported

 Copyright © Huawei Technologies Co., Ltd.

No.	Grid Code	Remarks	SUN2000-90KTL-H0	SUN2000-90KTL-H1	SUN2000-90KTL-H2	SUN2000-95KTL-INH0/95KTL-INH1	SUN2000-100KTL-H0/100KTL-H2	SUN2000-100KTL-H1	SUN2000-105KTL-H1
25	CEI0-16-MV800	Italy medium-voltage power grid (CEI0-16)	-	Supported	Supported	-	-	Supported	Supported
26	ZAMBIA-MV800	Zambia medium-voltage power grid	-	Supported	Supported	-	-	Supported	Supported
27	KENYA_ETHIOPIA_MV800	Kenya low-voltage and Ethiopia medium-voltage power grid	-	Supported	Supported	-	-	Supported	Supported
28	NAMIBIA_MV800	Namibia medium-voltage power grid	-	Supported	Supported	-	-	Supported	Supported
29	Cameroon-MV800	Cameroon medium-voltage power grid	-	Supported	Supported	-	-	Supported	Supported
30	NIGERIA-MV800	Nigeria medium-voltage power grid	-	Supported	Supported	-	-	Supported	Supported

 Copyright © Huawei Technologies Co., Ltd.

No.	Grid Code	Remarks	SUN2000-90KTL-H0	SUN2000-90KTL-H1	SUN2000-90KTL-H2	SUN2000-95KTL-INH0/95KTL-INH1	SUN2000-100KTL-H0/100KTL-H2	SUN2000-100KTL-H1	SUN2000-105KTL-H1
31	ABUDHABI-MV800	Abu Dhabi medium-voltage power grid	-	Supported	Supported	-	-	Supported	Supported
32	LEBANON-MV800	Lebanon medium-voltage power grid	-	Supported	Supported	-	-	Supported	Supported
33	ARGENTINA-MV800	Argentina medium-voltage power grid	-	-	-	-	-	Supported	Supported
34	Jordan-Transmission-HV800	Jordan high-voltage power grid	-	Supported	Supported	-	-	-	Supported
35	TUNISIA-MV800	Tunisia medium-voltage power grid	-	Supported	Supported	-	-	Supported	Supported
36	AUSTRALIA-NER-MV800	Australia NER medium-voltage power grid	-	Supported	Supported	-	-	-	-
37	VDE-AR-N4120_HV800	VDE4120 power grid	Supported	Supported	Supported	Supported	-	Supported	Supported
38	IEEE 1547-MV800	IEEE 1547 power grid	Supported	Supported	Supported	Supported	-	Supported	Supported

 Copyright © Huawei Technologies Co., Ltd.

No.	Grid Code	Remarks	SUN2000-90KTL-H0	SUN2000-90KTL-H1	SUN2000-90KTL-H2	SUN2000-95KTL-INH0/95KTL-INH1	SUN2000-100KTL-H0/100KTL-H2	SUN2000-100KTL-H1	SUN2000-105KTL-H1
39	RD1699/661-MV800	Spain medium-voltage power grid (RD1699/661)	-	-	-	-	-	Supported	Supported
40	PO12.3-MV800	Spain medium-voltage power grid (PO12.3)	-	-	-	-	-	Supported	Supported
41	Vietnam-MV800	Vietnam medium-voltage power grid	-	Supported	Supported	-	-	-	Supported
42	CHILE-PMGD-MV800	Chile PMGD medium-voltage power grid	-	-	-	-	-	Supported	Supported
43	GHANA-MV800	Ghana medium-voltage power grid	-	Supported	Supported	-	-	Supported	Supported
44	TAIPOWER-MV800	Taiwan power medium-voltage power grid	-	Supported	Supported	-	-	-	-
45	OMAN-MV800	Oman medium-voltage power grid	-	Supported	Supported	-	-	Supported	Supported

 Copyright © Huawei Technologies Co., Ltd.

No.	Grid Code	Remarks	SUN2000-90KTL-H0	SUN2000-90KTL-H1	SUN2000-90KTL-H2	SUN2000-95KTL-INH0/95KTL-INH1	SUN2000-100KTL-H0/100KTL-H2	SUN2000-100KTL-H1	SUN2000-105KTL-H1
46	KUWAIT-MV800	Kuwait medium-voltage power grid	-	Supported	Supported	-	-	Supported	Supported
47	BANGLADESH-MV800	Bangladesh medium-voltage power grid	-	Supported	Supported	-	-	-	-
48	BAHRAIN-MV800	Bahrain medium-voltage power grid	-	Supported	Supported	-	-	Supported	Supported
49	Oman-PDO-MV800	Oman PDO medium-voltage power grid	-	Supported	Supported	-	-	-	-
50	KAZAKHSTAN-MV800	Kazakhstan medium-voltage power grid	-	-	-	-	-	Supported	Supported
51	Mauritius-MV800	Mauritius medium-voltage power grid	-	-	-	-	-	Supported	Supported
52	TAI-MEA-MV800	Thailand MEA medium-voltage power grid	-	-	-	-	-	-	Supported

 Copyright © Huawei Technologies Co., Ltd.

No.	Grid Code	Remarks	SUN2000-90KTL-H0	SUN2000-90KTL-H1	SUN2000-90KTL-H2	SUN2000-95KTL-INH0/95KTL-INH1	SUN2000-100KTL-H0/100KTL-H2	SUN2000-100KTL-H1	SUN2000-105KTL-H1
53	PORTUGAL-MV800	Portugal medium-voltage power grid	-	Supported	-	-	-	Supported	-
54	C10/11-MV800	Belgium medium-voltage power grid	-	-	-	-	-	Supported	Supported
55	G99-TYPEB-HV-MV800	UK G99_TypeB_HV medium-voltage power grid	-	Supported	Supported	-	-	Supported	Supported
56	G99-TYPEC-HV-MV800	UK G99_TypeC_HV medium-voltage power grid	-	Supported	Supported	-	-	Supported	Supported
57	G99-TYPED-MV800	UK G99_TypeD medium-voltage power grid	-	Supported	Supported	-	-	Supported	Supported
58	CEA_MV800	India CEA power power grid	-	-	-	Supported	-	-	-
59	VDE-AR-N4110-MV800	Germany medium-voltage power grid	-	-	Supported	-	-	Supported	Supported

 Copyright © Huawei Technologies Co., Ltd.

No.	Grid Code	Remarks	SUN2000-90KTL-H0	SUN2000-90KTL-H1	SUN2000-90KTL-H2	SUN2000-95KTL-INH0/95KTL-INH1	SUN2000-100KTL-H0/100KTL-H2	SUN2000-100KTL-H1	SUN2000-105KTL-H1
60	NTS-MV800	Spain medium-voltage power grid	-	-	-	-	-	Supported	Supported

NOTE

The grid codes are subject to change. The listed codes are for your reference only.

 Copyright © Huawei Technologies Co., Ltd.

C Acronyms and Abbreviations

C

CCO	central controller
CEC	California Energy Commission
CPV	Concentrated Photovoltaics technology

L

LED	light emitting diode

M

MPP	maximum power point
MPPT	maximum power point tracking

P

PID	potential induced degradation
PV	photovoltaic

 Copyright © Huawei Technologies Co., Ltd.

R

RCMU	residual current monitoring unit

W

WEEE	waste electrical and electronic equipment

 Copyright © Huawei Technologies Co., Ltd.