SUN2000-(90KTL, 95KTL, 100KTL, 105KTL) Series

Quick Guide

Issue: 08
Part Number: 31509904
Date: 2021-05-06

HUAWEI TECHNOLOGIES CO., LTD.

NOTICE

- The information in this document is subject to change without notice. Every effort has been made in the preparation of this document to ensure accuracy of the contents, but all statements, information, and recommendations in this document do not constitute a warranty of any kind, express or implied.
- Only qualified and trained electrical technicians are allowed to operate the device. Operators should understand the composition and working principles of the grid-tied PV power system and local standards.
- Before installing the device, read the user manual carefully to get familiar with product information and safety precautions. Huawei shall not be liable for any consequences caused by the violation of the storage, transportation, installation, and operation regulations specified in this document and the user manual.
- Use insulated tools when installing the device. For personal safety, wear proper personal protective equipment (PPE).

1 Overview

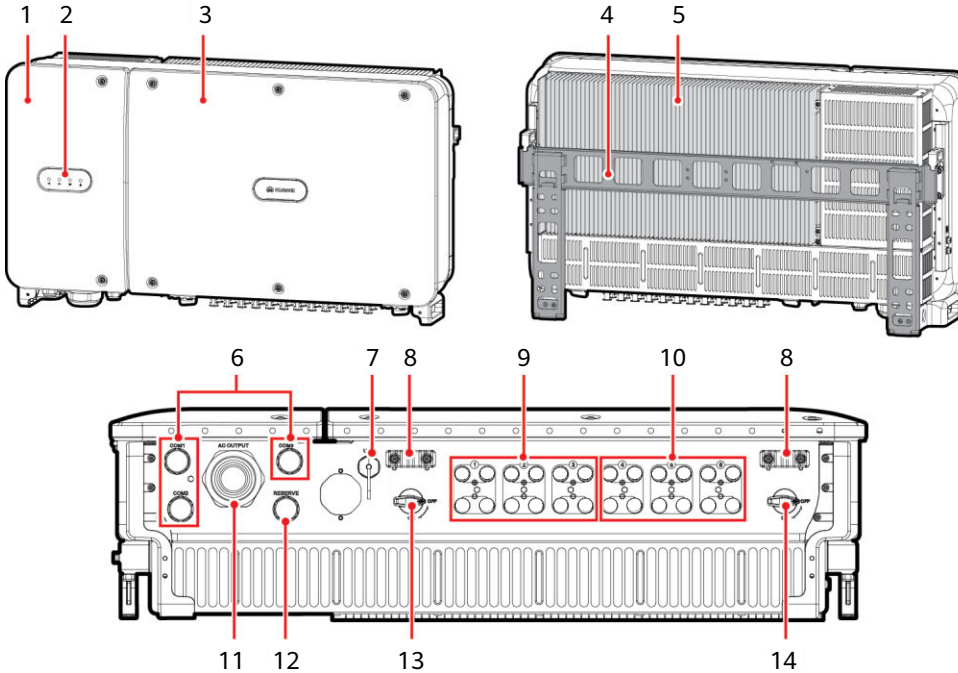

(1) Maintenance compartment door

(2) LED indicators

(3) Host panel

(4) Mounting bracket

(5) Heat sink

(6) Communications cable glands (COM1/COM2/COM3)

(7) USB port (USB)

(8) Auxiliary handles

(9) DC input terminals (+/–; controlled by DC SWITCH 1)

(10) DC input terminals (+/–; controlled by DC SWITCH 2)

(11) AC output cable gland (AC OUTPUT)

(12) Reserved cable gland (RESERVE)

(13) DC switch 1 (DC SWITCH 1)

(14) DC switch 2 (DC SWITCH 2)

Copyright © Huawei Technologies Co., Ltd. 2021. All rights reserved.

2 Installation Requirements

Angle

Space

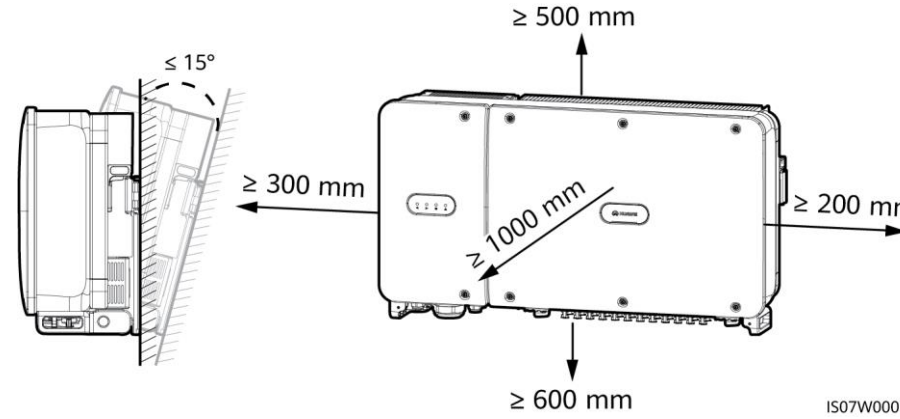

Recommended: 600 mm ≤ bottom space ≤ 730 mm

Dimensions

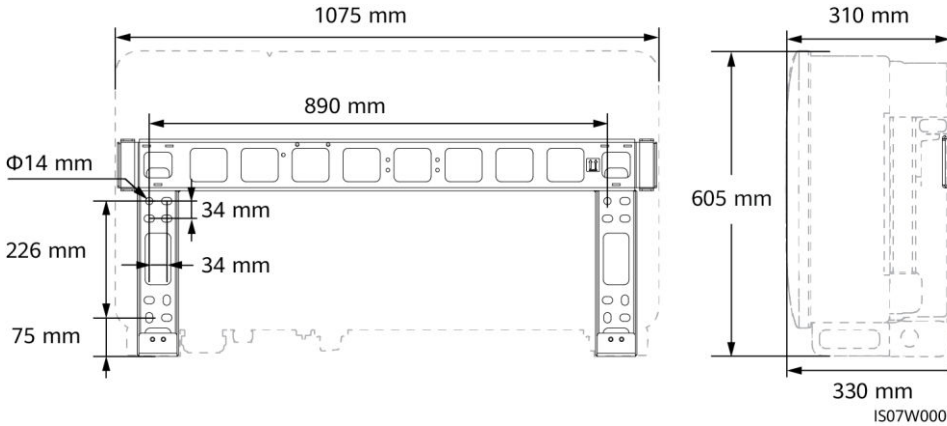

3 Installing the SUN2000

NOTE

- The M12x40 bolt assemblies are delivered with the SUN2000. If the bolt assembly length does not meet the installation requirements, prepare M12 bolt assemblies by yourself and use them together with the delivered M12 nuts.
- Before installing the mounting bracket, remove the security Torx wrench from the mounting bracket and save it for later use.
- This document introduces how to install the SUN2000 on a support as an example. For details about wall-mounted installation, see the user manual.

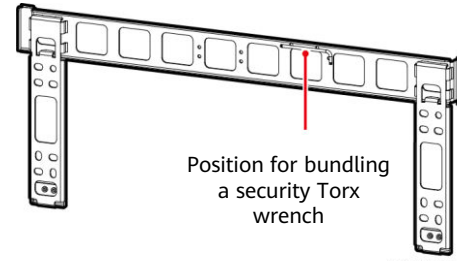

IS06H00040

1. Install the mounting bracket.

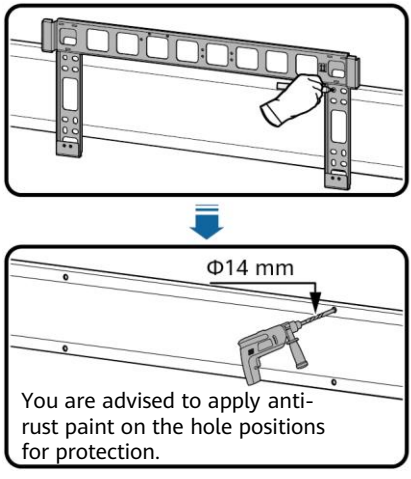

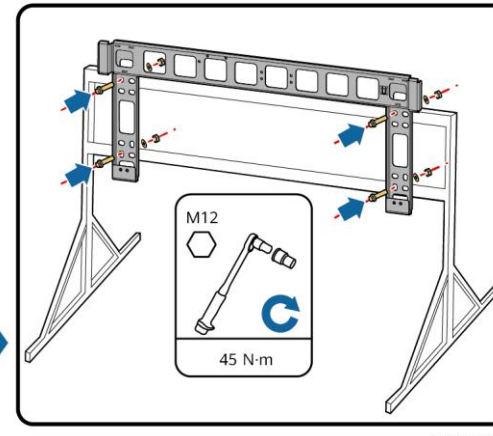

IS07H00010

2. Install the SUN2000 on the mounting bracket.

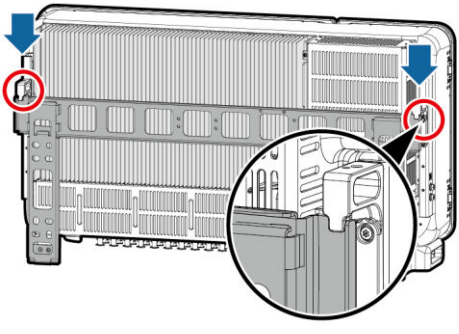

3. Tighten security Torx screws.

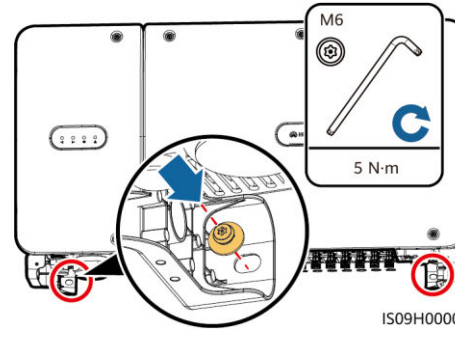

IS09H00007

4 Electrical Connections

NOTICE

Connect cables in accordance with the local installation laws and regulations.

4.1 Preparing Cables

No.	Cable	Type	Recommended Conductor Cross-Sectional Area	Outer Diameter
1	PE cable	Outdoor copper cable and M8 OT/DT terminals	≥ 16 mm^2	N/A
2	(Optional) Tracking system power cable	Three-core outdoor copper cable with dual-layer protection	6 mm^2	14–18 mm
3	AC output power cable (OT/DT terminal)	• If you connect a PE cable to the PE point on the enclosure, you are advised to use a three-core (L1, L2, and L3) outdoor copper cable and M10 OT/DT terminals (L1, L2, and L3). • If you connect a PE cable to the PE point in the maintenance compartment, you do not need to prepare a PE cable separately but are advised to use a four-core (L1, L2, L3, and PE) outdoor copper cable, M10 OT/DT terminals (L1, L2, and L3), and M8 OT/DT terminals (PE).	• L1, L2, L3: 35 mm^2 • PE: ≥ 16 mm^2	24–57 mm
	AC output power cable (terminal clamp)	• If you connect a PE cable to the PE point on the enclosure, you are advised to use a three-core (L1, L2, and L3) outdoor copper cable. • If you connect a PE cable to the PE point in the maintenance compartment, you do not need to prepare a PE cable separately but are advised to use a four-core (L1, L2, L3, and PE) outdoor copper cable and M8 OT/DT terminals (PE).	• L1, L2, L3: 35 mm^2 • PE: ≥ 16 mm^2	24–57 mm
4	DC input power cable	PV cable that meets the 1500 V standard	4 mm^2	4.5–7.8 mm
5	RS485 communications cable (connected to a terminal block; recommended)	Multi-paired, individually foil shielded cable that complies with local standards and M6 OT terminals	1 mm^2	14–18 mm
	RS485 communications cable (connected to a network port)	CAT 5E outdoor shielded network cable with internal resistance ≤ 1.5 ohms/10 m, as well as the shielded RJ45 connector	N/A	7–9 mm

4.2 Installing the PE Cable (on the Enclosure)

NOTE

- It is recommended that the PE cable be connected to a nearby PE point. Connect the PE points of all SUN2000s in the same PV array to ensure equipotential connections to PE cables.
- To enhance the corrosion resistance of a ground terminal, you are advised to apply silica gel or paint on it after connecting the PE cable.

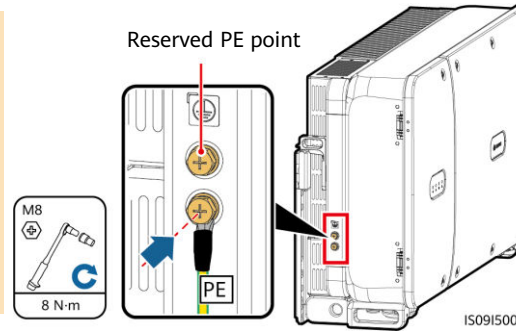

4.3 Opening the Maintenance Compartment Door

WARNING

- Do not open the host panel of the SUN2000.
- Before opening the SUN2000 maintenance compartment door, turn off the downstream AC output switch and two DC switches at the bottom.
- Do not open the maintenance compartment door in rainy or snowy days. If you must, take protective measures to prevent rain or snow from entering the maintenance compartment.
- Do not leave unused screws in the maintenance compartment.

1. Loosen the screws on the maintenance compartment door.
2. Open the maintenance compartment door and adjust the support bar.

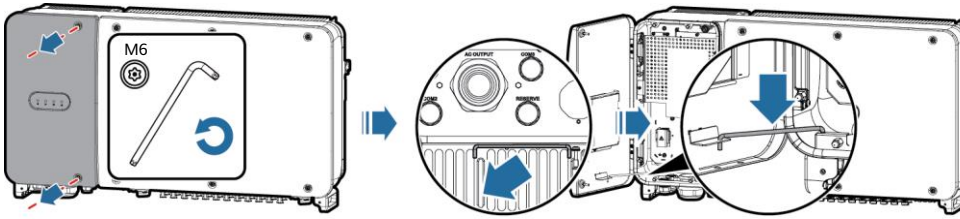

3. Remove the cover and hang it on the hook of the enclosure door.

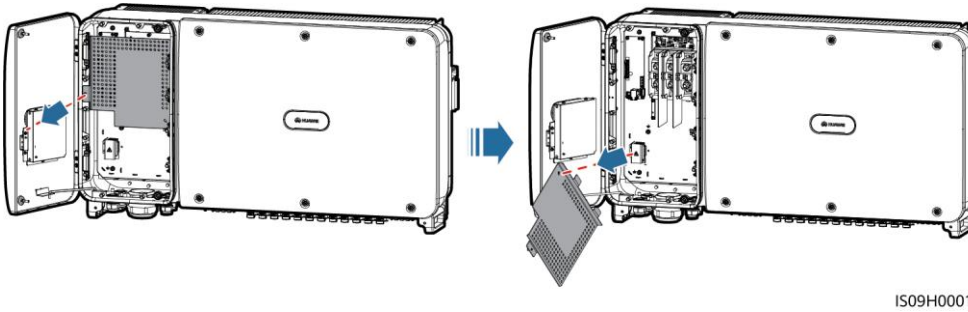

4.4 Installing the AC Output Power Cable

NOTICE

- This document introduces how to install the four-core AC output power cable, which can be a reference for installing the three-core cable. The three-core cable does not need a PE cable installed in the maintenance compartment.
- To avoid damaging the rubber liner, do not route a cable with a crimped OT/DT terminal directly through it.
- Do not adjust the cable when the sealing nut is tightened. Otherwise, the rubber liner will shift, which affects the IP rating of the device.
- Ensure that AC terminations are secured. Failing to do so may cause the SUN2000 to malfunction or damage to its terminal block by issues such as overheating.
- Sufficient slack should be provided in the PE cable to ensure that the last cable bearing the force is the PE cable when the AC output power cable bears pulling force due to force majeure.

Installation Procedure (Using the OT/DT Terminal)

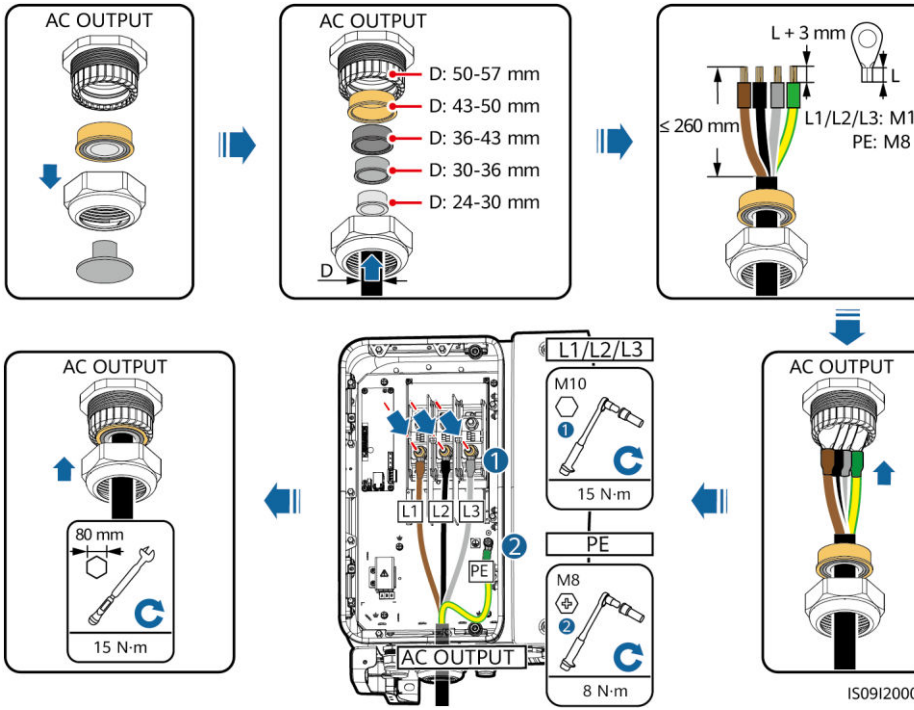

NOTICE

After the AC output power cable is installed, seal the cable gland.

Installation Procedure (Using the Terminal Clamp)

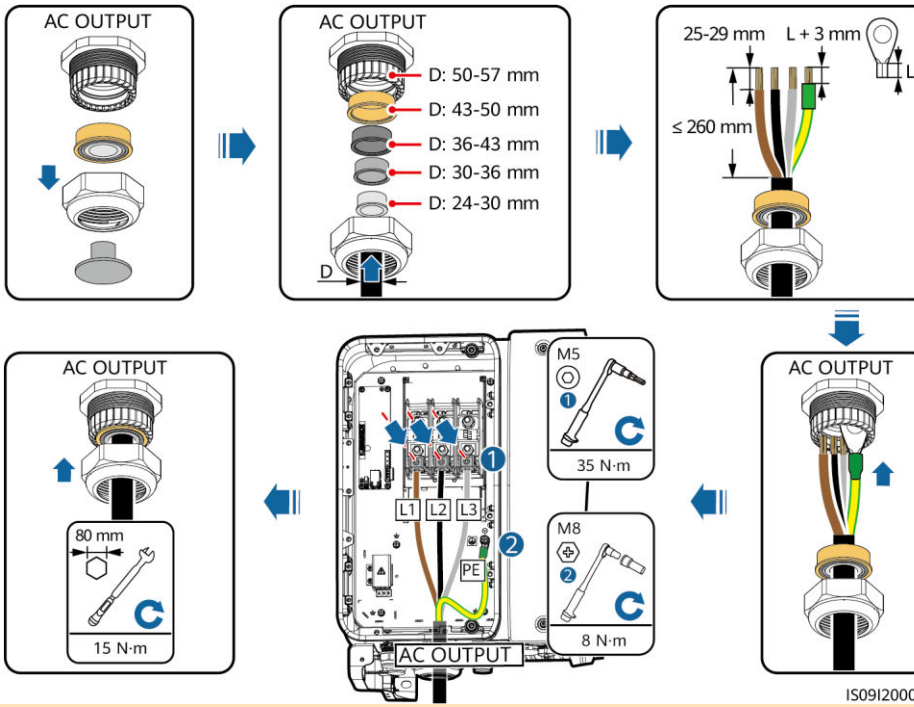

NOTICE

After the AC output power cable is installed, seal the cable gland.

4.5 Installing the DC Input Power Cable

The SUN2000 provides 12 DC input terminals, which are controlled by its two DC switches. DC SWITCH 1 controls DC input terminals 1–6 (MPPT1–3) and DC SWITCH 2 controls DC input terminals 7–12 (MPPT4–6).

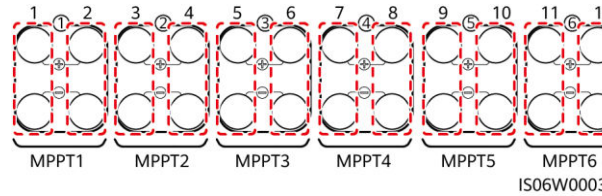

When DC inputs are not fully configured, the input terminals should meet the following requirements:

1. Evenly distribute DC input power cables on the DC input terminals controlled by the two DC switches.
2. Maximize the number of connected MPPT circuits.

For example, if the number of input routes is 6–11, the recommended DC input terminals are as follows:

Number of PV Strings	Terminal Selection	Number of PV Strings	Terminal Selection
6	Connects to routes 2, 4, 6, 8, 10, and 12.	7	Connects to routes 2, 4, 6, 8, 9, 10, and 12.
8	Connects to routes 1, 2, 4, 6, 8, 9, 10, and 12.	9	Connects to routes 1, 2, 4, 6, 7, 8, 9, 10, and 12.
10	Connects to routes 1, 2, 4, 6, 7, 8, 9, 10, 11, and 12.	11	Connects to routes 1, 2, 3, 4, 6, 7, 8, 9, 10, 11, and 12.

WARNING

- Ensure that the PV module output is well insulated to ground.
- Before inserting the positive and negative connectors respectively into the positive and negative DC input terminals of the SUN2000, ensure that the DC voltage does not exceed 1500 V DC using a multimeter and that the cable polarities are correct. Otherwise, the SUN2000 will be damaged.

NOTICE

1. Use the positive and negative Amphenol UTX metal contacts and DC connectors supplied with the SUN2000. Using other positive and negative metal contacts and DC connectors may result in serious consequences. The caused device damage is not covered under any warranty.
2. Crimp the metal contacts using crimping tool UTXTC0003 (Amphenol, recommended) or UTXTC0002 (Amphenol).
3. Before connecting the DC input power cable, label the cable polarities to ensure correct cable connections. Otherwise, the SUN2000 may be damaged.
4. Measure the voltage at the DC input end using a multimeter. If the voltage is a negative value, the DC input polarity is incorrect. Correct the polarity. If the voltage is greater than 1500 V, too many PV modules are configured to the same string. Remove some PV modules.
5. If the DC input power cable is reversely connected and the DC switch is turned on, do not perform operations on the DC switch or the positive/negative connectors immediately. Otherwise, the device may be damaged. The caused device damage is not covered under any warranty. Wait until the night when solar irradiance declines and the PV string current drops to below 0.5 A. Then turn the two DC switches to the OFF position, remove the positive and negative DC input power connectors, and correct the polarity of the DC input power cable.

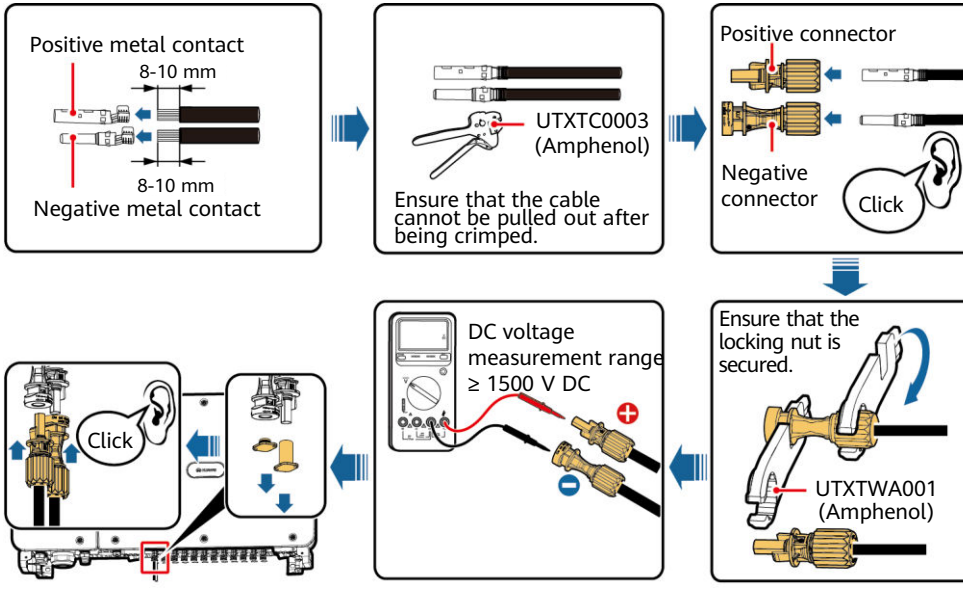

4.6 Installing the RS485 Communications Cable

NOTICE

1. When routing the communications cable, separate it from power cables and connect the shield layer to the ground point to prevent communication from being affected.
2. The RS485 communications cable can connect to a terminal block or an RJ45 network port. Select one in actual installation.

Connecting to a Terminal Block (Recommended)

No.	Definition	Description	No.	Definition	Description
1	RS485A IN	RS485A, RS485 differential signal+	2	RS485A OUT	RS485A, RS485 differential signal+
3	RS485B IN	RS485B, RS485 differential signal–	4	RS485B OUT	RS485B, RS485 differential signal–

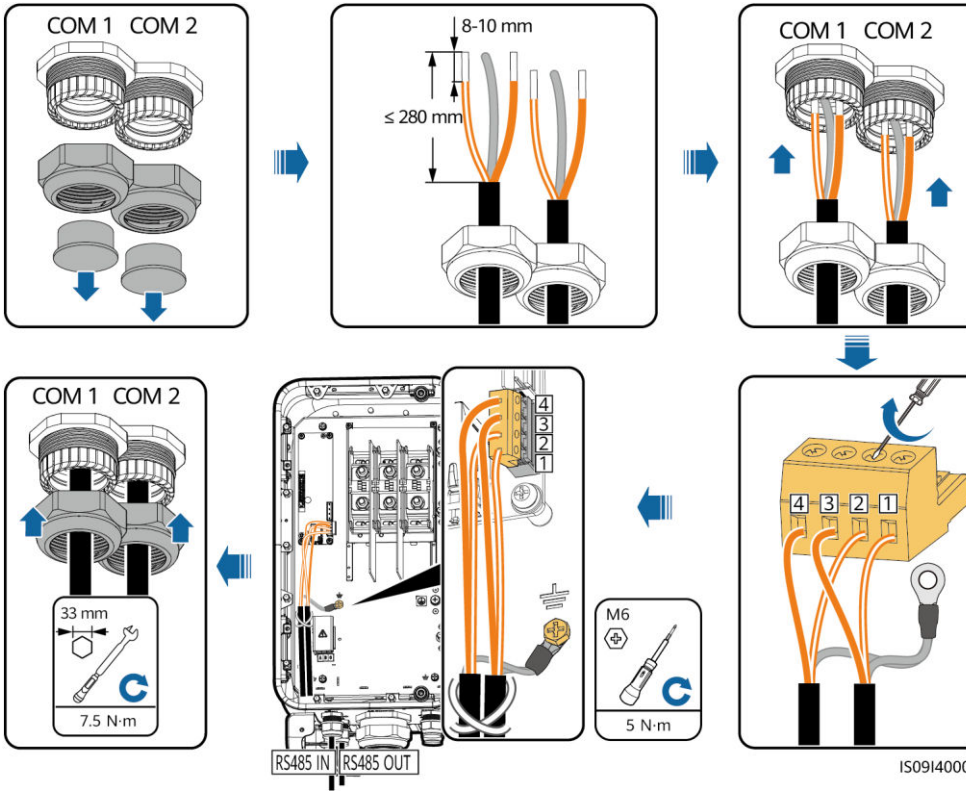

NOTICE

After the RS485 communications cable is installed, seal the cable gland.

Connecting to an RJ45 Network Port

No.	Definition	No.	Definition
1, 4	RS485A, RS485 differential signal+	2, 5	RS485B, RS485 differential signal–

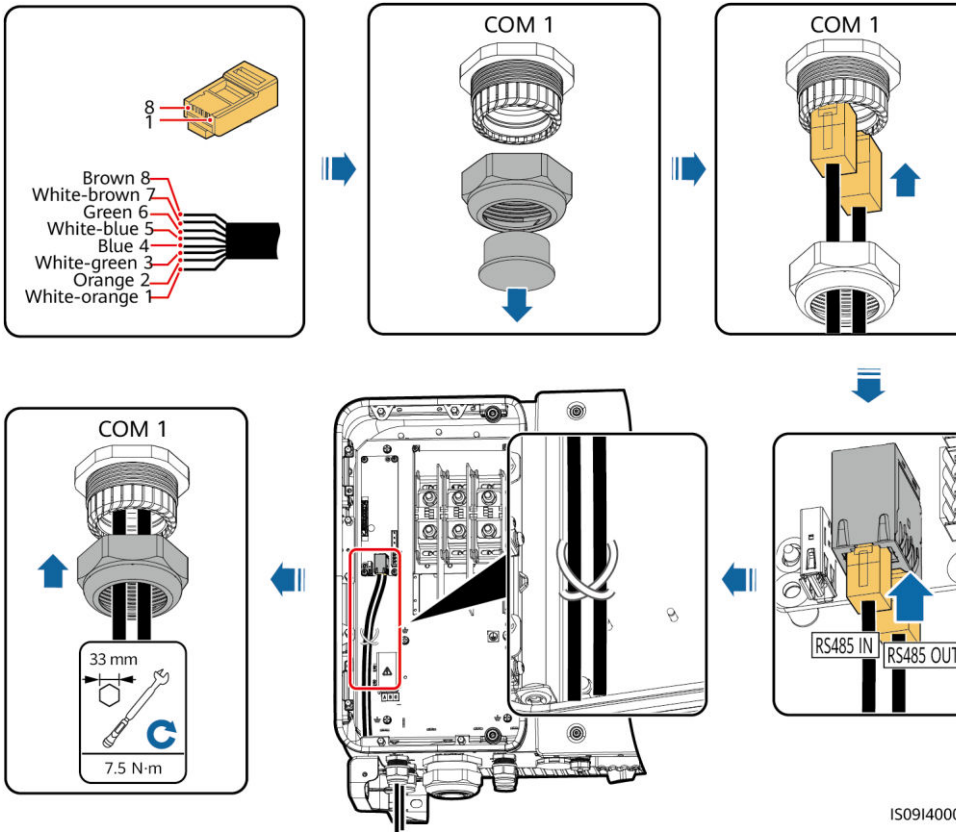

NOTICE

After the RS485 communications cable is installed, seal the cable gland.

4.7 (Optional) Installing the Tracking System Power Cable

NOTICE

- The tracking system should be equipped with an overcurrent protective device/component. The power cable between the device/component and wiring terminal should be no longer than 2.5 m.
- The tracking system is powered by the three-phase AC power grid with a rated voltage of 800 V.
- Keep inflammable materials away from the power cable.
- The power cable must be protected with a conduit to prevent short circuits caused by insulation layer damage.

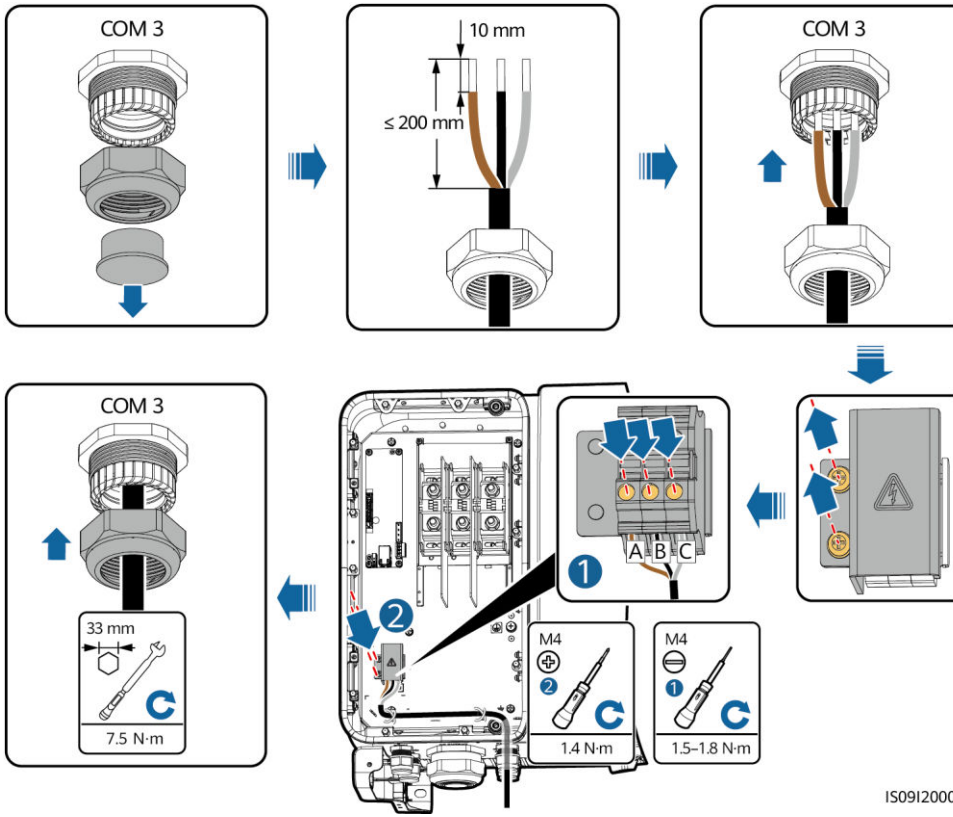

NOTICE

After the tracking system power cable is installed, seal the cable gland.

5 Closing the Maintenance Compartment Door

1. Install the cover and adjust the support bar.
2. Close the maintenance compartment door.

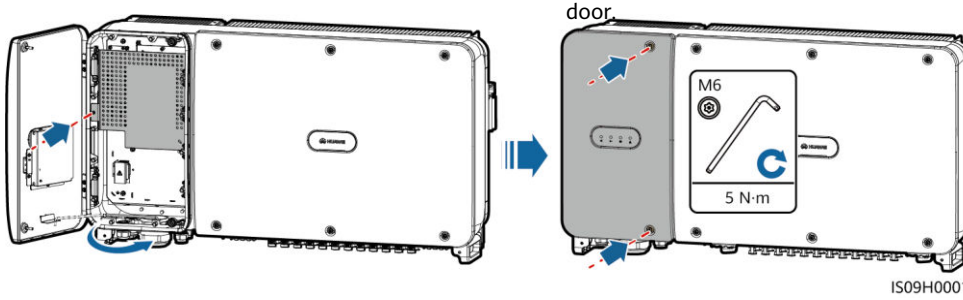

NOTE

If the screws on the enclosure door are lost, obtain the spare screws from the fitting bag tied at the enclosure bottom.

6 Verifying Installation

No.	Acceptance Criteria
1	The SUN2000 is installed correctly and securely.
2	The DC switches and downstream AC switch are set to OFF.
3	All cables are connected correctly and securely.
4	Used cable glands are sealed and sealing nuts are tightened.
5	Unused terminals and ports are locked by watertight caps.
6	The installation space is proper, and the installation environment is clean and tidy, without foreign matter.
7	The AC terminal cover is reinstalled.
8	The maintenance compartment door is closed and the door screws are tightened.

7 Powering On the System

NOTICE

Before turning on the AC switch between the SUN2000 and the power grid, check that the AC voltage is within the specified range using a multimeter.

1. Turn on the AC switch between the SUN2000 and the power grid.
2. Turn the two DC switches at the bottom of the SUN2000 to the ON position.
3. Observe the LED indicators to check the SUN2000 operating status.

Indicator	Status		Description
PV connection indicator	Steady green		At least one PV string is properly connected, and the DC input voltage of the corresponding MPPT circuit is at least 600 V.
	Off		The SUN2000 disconnects from all PV strings, or the DC input voltage of each MPPT circuit is less than 600 V.
Grid-tied indicator	Steady green		The SUN2000 is in grid-tied mode.
	Off		The SUN2000 is not in grid-tied mode.
Communications indicator	Blinking green		The SUN2000 receives communications data normally.
	Off		The SUN2000 receives no communications data for 10s.
Alarm/ Maintenance indicator	Alarm status	The red indicator is blinking at long intervals (on for 1s and then off for 4s).	A warning alarm is generated.
		The red indicator is blinking at short intervals (on for 0.5s and then off for 0.5s).	A minor alarm is generated.
		Steady red	A major alarm is generated.
	Local maintenance status	The green indicator is blinking at long intervals (on for 1s and then off for 1s).	Local maintenance is in progress.
		The green indicator is blinking at short intervals (on for 0.125s and then off for 0.125s).	Local maintenance failed.
		Steady green	Local maintenance succeeded.

8 SUN2000 App

NOTE

1. The SUN2000 app is mobile phone app that communicates with the SUN2000 monitoring system over a USB data cable, Bluetooth module, or WLAN module. As a convenient local monitoring and maintenance platform, it supports alarm query, parameter configuration, and routine maintenance. The app name is **SUN2000**.
2. Log in to Huawei AppGallery (https://appstore.huawei.com), search for SUN2000, and download the app installation package. You can also scan the QR code (https://appgallery.cloud.huawei.com/appdl/C10279542) to download the installation package.
3. Connect a USB data cable, a Bluetooth module, or a WLAN module to the USB port of the SUN2000 to implement the communication between the SUN2000 and the app.

WLAN or Bluetooth Connection

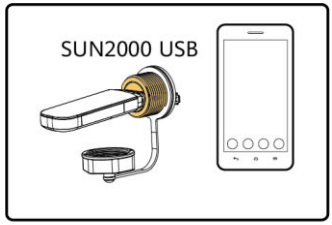

USB Data Cable Connection

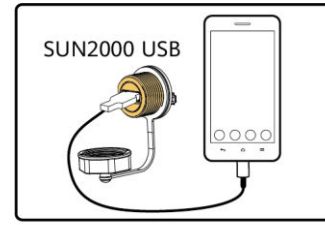

IS07H00020

Login Page

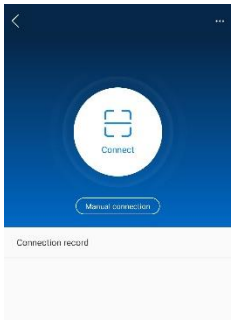

Select Connection Mode

Select User

Quick Settings

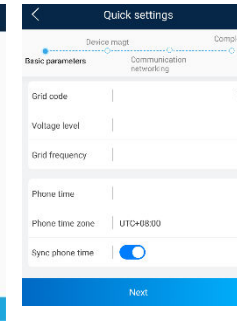

Function Menu

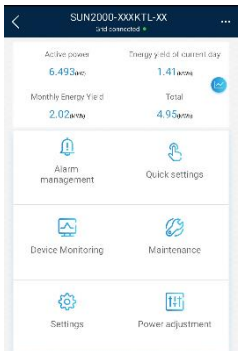

NOTICE

- The screenshots in this document correspond to app version 3.2.00.013 (Android).
- When the WLAN connection is used, the initial name of the WLAN hotspot is **Adapter-*WLAN module SN***, and the initial password is **Changeme**.
- The initial password for **Common User**, **Advanced User**, and **Special User** is **00000a**.
- Use the initial password upon first power-on and change it immediately after login. To ensure account security, change the password periodically and keep the new password in mind. Not changing the initial password may cause password disclosure. A password left unchanged for a long period of time may be stolen or cracked. If a password is lost, devices cannot be accessed. In these cases, the user is liable for any loss caused to the PV plant.
- Set the correct grid code based on the application area and scenario of the solar inverter.

Huawei Technologies Co., Ltd.
Huawei Industrial Base, Bantian, Longgang
Shenzhen 518129 People's Republic of China
www.huawei.com