SUN2000-(100KTL, 110KTL, 115KTL)-M2

User Manual

Issue	02
Date	2022-06-30

HUAWEI TECHNOLOGIES CO., LTD.

Copyright © Huawei Technologies Co., Ltd. 2022. All rights reserved.

No part of this document may be reproduced or transmitted in any form or by any means without prior written consent of Huawei Technologies Co., Ltd.

Trademarks and Permissions

HUAWEI and other Huawei trademarks are trademarks of Huawei Technologies Co., Ltd.
All other trademarks and trade names mentioned in this document are the property of their respective holders.

Notice

The purchased products, services and features are stipulated by the contract made between Huawei and the customer. All or part of the products, services and features described in this document may not be within the purchase scope or the usage scope. Unless otherwise specified in the contract, all statements, information, and recommendations in this document are provided "AS IS" without warranties, guarantees or representations of any kind, either express or implied.

The information in this document is subject to change without notice. Every effort has been made in the preparation of this document to ensure accuracy of the contents, but all statements, information, and recommendations in this document do not constitute a warranty of any kind, express or implied.

Huawei Technologies Co., Ltd.

Address: Huawei Industrial Base
Bantian, Longgang
Shenzhen 518129
People's Republic of China

Website: https://e.huawei.com

About This Document

Overview

This document describes the SUN2000-115KTL-M2, SUN2000-110KTL-M2, SUN2000-100KTL-M2, and SUN2000-100KTL-INM2 (also referred to as SUN2000) in terms of installation, electrical connection, commissioning, maintenance, and troubleshooting. Before installing and operating the solar inverter, ensure that you are familiar with the features, functions, and safety precautions provided in this document.

Intended Audience

This document is intended for photovoltaic (PV) plant operating personnel and qualified electricians.

Symbol Conventions

The symbols that may be found in this document are defined as follows.

Symbol	Description
DANGER	Indicates a hazard with a high level of risk which, if not avoided, will result in death or serious injury.
WARNING	Indicates a hazard with a medium level of risk which, if not avoided, could result in death or serious injury.
CAUTION	Indicates a hazard with a low level of risk which, if not avoided, could result in minor or moderate injury.
NOTICE	Indicates a potentially hazardous situation which, if not avoided, could result in equipment damage, data loss, performance deterioration, or unanticipated results. NOTICE is used to address practices not related to personal injury.

Copyright © Huawei Technologies Co., Ltd.

Symbol	Description
NOTE	Supplements the important information in the main text. NOTE is used to address information not related to personal injury, equipment damage, and environment deterioration.

Change History

Changes between document issues are cumulative. The latest document issue contains all the changes made in earlier issues.

Issue 01 (2022-06-30)

Added sections about setting app parameters and resetting password, changed insulated tools, and updated power-off for troubleshooting and technical specifications.

Updated **4.2 Tools**.

Added **7.1.4 Setting Parameters**.

Updated **8.2 Power-Off for Troubleshooting**.

Updated **10 Technical Specifications**.

Added **B Resetting Password**.

Issue 01 (2022-05-20)

This issue is used for first office application (FOA).

 Copyright © Huawei Technologies Co., Ltd.

Contents

About This Document ii

1 Safety Information 1

1.1 General Safety 1
1.2 Personnel Requirements 2
1.3 Electrical Safety 3
1.4 Installation Environment Requirements 4
1.5 Mechanical Safety 4
1.6 Commissioning 6
1.7 Maintenance and Replacement 6

2 Overview 7

2.1 Product Model 7
2.2 Overview 8
2.3 Label Description 10
2.4 Product Appearance 11
2.4.1 Appearance 12
2.4.2 Indicator Status 14
2.5 Working Principles 16
2.5.1 Circuit Diagram 16
2.5.2 Working Modes 17

3 Solar Inverter Storage 19

4 Installation 21

4.1 Check Before Installation 21
4.2 Tools 22
4.3 Determining the Installation Position 24
4.4 Installing the Mounting Bracket 28
4.4.1 Support-mounted Installation 28
4.4.2 Wall-mounted Installation 29
4.5 Installing a Solar Inverter 31

5 Electrical Connections 35

5.1 Precautions 35
5.2 Preparing Cables 35

5.3 Connecting the PE Cable....43
5.4 Opening the Maintenance Compartment Door....44
5.5 (Optional) Installing the Power Cable of the Tracking System....47
5.6 Connecting an AC Output Power Cable....47
5.7 Connecting DC Input Power Cables....54
5.8 Connecting the RS485 Communications Cables....58

6 Commissioning....61
6.1 Check Before Power-on....61
6.2 Powering On the SUN2000....61

7 Man-Machine Interactions....63
7.1 Operations with the SUN2000 App....63
7.1.1 App Introduction....63
7.1.2 Downloading and Installing the App....64
7.1.3 Logging In to the App....65
7.1.4 Setting Parameters....70
7.1.4.1 Setting Grid Parameters....70
7.1.4.2 Setting Protection Parameters....71
7.1.4.3 Setting Feature Parameters....73
7.1.4.4 Setting Power Adjustment Parameters....80
7.2 (Optional) Installing a Smart Dongle....84
7.3 Upgrading the Inverter....85

8 Maintenance....87
8.1 Shutdown and Power-Off....87
8.2 Power-Off for Troubleshooting....87
8.3 Routine Maintenance....89
8.4 Troubleshooting....91
8.5 Replacing a Fan....104
8.6 Resetting and Turning On the DC Switch....108

9 Handling the Inverter....109
9.1 Removing the SUN2000....109
9.2 Packing the SUN2000....109
9.3 Disposing of the SUN2000....109

10 Technical Specifications....110

A Grid Codes....115

B Resetting Password....126

C Domain name of the management system....127

D Acronyms and Abbreviations....128

1 Safety Information

1.1 General Safety

Statement

Before installing, operating, and maintaining the equipment, read this document and observe all the safety instructions on the equipment and in this document.

The "NOTICE", "CAUTION", "WARNING", and "DANGER" statements in this document do not cover all the safety instructions. They are only supplements to the safety instructions. Huawei will not be liable for any consequence caused by the violation of general safety requirements or design, production, and usage safety standards.

Ensure that the equipment is used in environments that meet its design specifications. Otherwise, the equipment may become faulty, and the resulting equipment malfunction, component damage, personal injuries, or property damage are not covered under the warranty.

Follow local laws and regulations when installing, operating, or maintaining the equipment. The safety instructions in this document are only supplements to local laws and regulations.

Huawei will not be liable for any consequences of the following circumstances:

- Operation beyond the conditions specified in this document
- Installation or use in environments which are not specified in relevant international or national standards
- Unauthorized modifications to the product or software code or removal of the product
- Failure to follow the operation instructions and safety precautions on the product and in this document
- Equipment damage due to force majeure, such as earthquakes, fire, and storms
- Damage caused during transportation by the customer
- Storage conditions that do not meet the requirements specified in this document

 Copyright © Huawei Technologies Co., Ltd.

General Requirements

DANGER

Do not work with power on during installation.

- Do not install, use, or operate outdoor equipment and cables (including but not limited to moving equipment, operating equipment and cables, inserting connectors to or removing connectors from signal ports connected to outdoor facilities, working at heights, and performing outdoor installation) in harsh weather conditions such as lightning, rain, snow, and level 6 or stronger wind.
- After installing the equipment, remove idle packing materials such as cartons, foam, plastics, and cable ties from the equipment area.
- In the case of a fire, immediately leave the building or the equipment area, and turn on the fire alarm bell or make an emergency call. Do not enter the building on fire in any case.
- Do not scrawl, damage, or block any warning label on the equipment.
- Tighten the screws to the specified torque using tools when installing the equipment.
- Understand the components and functioning of a grid-tied PV power system and relevant local standards.
- Repaint any paint scratches caused during equipment transportation or installation in a timely manner. Equipment with scratches cannot be exposed to an outdoor environment for a long period of time.
- Do not open the host panel of the equipment.
- You shall not reverse engineer, decompile, disassemble, adapt, add code to the device software or alter the device software in any other way, research the internal implementation of the device, obtain the device software source code, infringe on Huawei's intellectual property, or disclose any device software performance test results.

Personal Safety

- If there is a probability of personal injury or equipment damage during operations on the equipment, immediately stop the operations, report the case to the supervisor, and take feasible protective measures.
- Use tools correctly to avoid hurting people or damaging the equipment.
- Do not touch the energized equipment, as the enclosure is hot.

1.2 Personnel Requirements

- Personnel who plan to install or maintain Huawei equipment must receive thorough training, understand all necessary safety precautions, and be able to correctly perform all operations.
- Only qualified professionals or trained personnel are allowed to install, operate, and maintain the equipment.
- Only qualified professionals are allowed to remove safety facilities and inspect the equipment.

 Copyright © Huawei Technologies Co., Ltd.

- Personnel who will operate the equipment, including operators, trained personnel, and professionals, should possess the local national required qualifications in special operations such as high-voltage operations, working at heights, and operations of special equipment.
- Only professionals or authorized personnel are allowed to replace the equipment or components (including software).

NOTE

- Professionals: personnel who are trained or experienced in equipment operations and are clear of the sources and degree of various potential hazards in equipment installation, operation, and maintenance
- Trained personnel: personnel who are technically trained, have required experience, are aware of possible hazards on themselves in certain operations, and are able to take protective measures to minimize the hazards on themselves and other people
- Operators: operation personnel who may come in contact with the equipment, except trained personnel and professionals

1.3 Electrical Safety

Grounding

- For the equipment that needs to be grounded, install the ground cable first when installing the equipment and remove the ground cable last when removing the equipment.
- Do not damage the ground conductor.
- Do not operate the equipment in the absence of a properly installed ground conductor.
- Ensure that the equipment is connected permanently to the protective ground. Before operating the equipment, check its electrical connection to ensure that it is securely grounded.

General Requirements

DANGER

Before connecting cables, ensure that the equipment is intact. Otherwise, electric shocks or fire may occur.

- Ensure that all electrical connections comply with local electrical standards.
- Obtain approval from the local electric utility company before using the equipment in grid-tied mode.
- Ensure that the cables you prepared meet local regulations.
- Use dedicated insulated tools when performing high-voltage operations.

 Copyright © Huawei Technologies Co., Ltd.

AC and DC Power

DANGER

Do not connect or disconnect power cables with power on. Transient contact between the core of the power cable and the conductor will generate electric arcs or sparks, which may cause fire or personal injury.

- Before making electrical connections, switch off the disconnector on the upstream device to cut off the power supply if people may contact energized components.
- Before connecting a power cable, check that the label on the power cable is correct.
- If the equipment has multiple inputs, disconnect all the inputs before operating the equipment.

Cabling

- When routing cables, ensure that a distance of at least 30 mm exists between the cables and heat-generating components or areas. This prevents damage to the insulation layer of the cables.
- Bind cables of the same type together. When routing cables of different types, ensure that they are at least 30 mm away from each other.
- Ensure that the cables used in a grid-tied PV power system are properly connected and insulated and meet specifications.

1.4 Installation Environment Requirements

- Ensure that the equipment is installed in a well ventilated environment.
- To prevent fire due to high temperature, ensure that the ventilation vents or heat dissipation system are not blocked when the equipment is running.
- Do not expose the equipment to flammable or explosive gas or smoke. Do not perform any operation on the equipment in such environments.

1.5 Mechanical Safety

Using Ladders

- Use wooden or fiberglass ladders when you need to perform live working at heights.
- When a step ladder is used, ensure that the pull ropes are secured and the ladder is held firm.
- Before using a ladder, check that it is intact and confirm its load bearing capacity. Do not overload it.
- Ensure that the wider end of the ladder is at the bottom, or protective measures have been taken at the bottom to prevent the ladder from sliding.

 Copyright © Huawei Technologies Co., Ltd.

- Ensure that the ladder is securely positioned. The recommended angle for a ladder against the floor is 75 degrees, as shown in the following figure. An angle rule can be used to measure the angle.

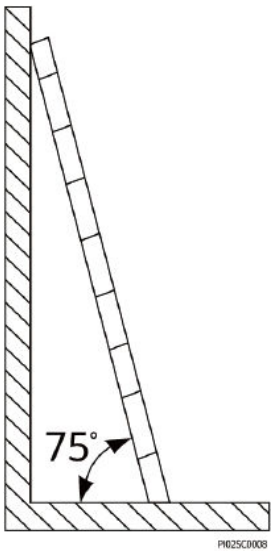

- When climbing a ladder, take the following precautions to reduce risks and ensure safety:
  - Keep your body steady.
  - Do not climb higher than the fourth rung of the ladder from the top.
  - Ensure that your body's center of gravity does not shift outside the legs of the ladder.

Drilling Holes

When drilling holes into a wall or floor, observe the following safety precautions:

- Wear goggles and protective gloves when drilling holes.
- When drilling holes, protect the equipment from shavings. After drilling, clean up any shavings that have accumulated inside or outside the equipment.

Moving Heavy Objects

- Be cautious to avoid injury when moving heavy objects.

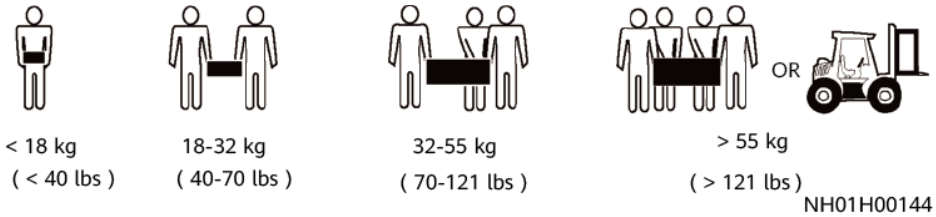

- When moving the equipment by hand, wear protective gloves to prevent injuries.

1.6 Commissioning

When the equipment is powered on for the first time, ensure that professional personnel set parameters correctly. Incorrect settings may result in inconsistency with local certification and affect the normal operation of the equipment.

1.7 Maintenance and Replacement

DANGER

High voltage generated by the equipment during operation may cause an electric shock, which could result in death, serious injury, or serious property damage. Prior to maintenance, power off the equipment and strictly comply with the safety precautions in this document and relevant documents.

- Maintain the equipment with sufficient knowledge of this document and using proper tools and testing equipment.
- Before maintaining the equipment, power it off and follow the instructions on the delayed discharge label to ensure that the equipment is powered off.
- Turn off the AC and DC switches of the SUN2000 when maintaining the electric equipment or power distribution equipment connected the SUN2000.
- Place temporary warning signs or erect fences to prevent unauthorized access to the maintenance site.
- If the equipment is faulty, contact your dealer.
- The equipment can be powered on only after all faults are rectified. Failing to do so may escalate faults or damage the equipment.

 Copyright © Huawei Technologies Co., Ltd.

2 Overview

2.1 Product Model

Model Description

NOTICE

The SUN2000-110KTL-M2 is applicable only to the Chinese mainland. For other countries or regions, the Company does not provide quality assurance.

This document covers the following product models:

- SUN2000-115KTL-M2
- SUN2000-110KTL-M2
- SUN2000-100KTL-M2
- SUN2000-100KTL-INM2

Figure 2-1 Model

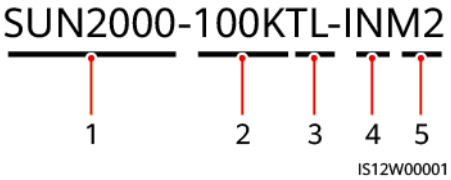

Table 2-1 Model description

No.	Description	Value
1	Product family	SUN2000: grid-tied solar inverter
2	Power	• 115K: The power level is 115 kW. • 110K: The power level is 110 kW. • 100K: The power level is 100 kW.
3	Topology	TL: transformerless
4	Region	IN: India
5	Design code	M2: product series with an input voltage level of 1100 V DC

Model Identification

You can obtain the solar inverter model from the model label on the external package and the nameplate on the side of the enclosure.

Figure 2-2 Position of the model label on the external package

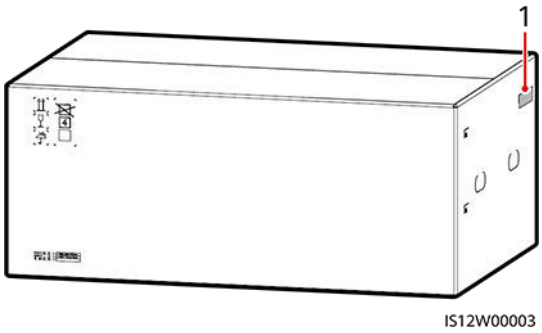

(1) Position of the model label

2.2 Overview

Description

SUN2000 solar inverters are grid-tied PV string inverters that convert the DC power generated by PV strings into AC power and feed the power into the power grid.

Characteristics

Smart

- Ten independent maximum power point tracking (MPPT) circuits and 20 PV string inputs. Flexible configuration of PV strings is supported.

- Smart PV module self-learning: Automatically detects PV module failures, helping rectify faults. Optimizes the working mode to obtain the optimal working mode of the system.
- Smart air cooling: Adjusts the fan speed based on the ambient temperature and load to ensure the service life of fans and avoid frequent maintenance.
- MBUS networking: Uses the existing power line for communication and does not require additional communications cable, which reduces the construction and maintenance costs and improves communication reliability and efficiency.
- Smart I-V curve diagnosis: Implements I-V scanning and health diagnosis for PV strings. In this way, potential risks and faults can be detected in time, improving the plant operation & maintenance (O&M) quality.

Safe

- Embedded DC and AC surge protection devices (SPDs): all-dimensional surge protection
- Embedded residual current monitoring unit: Immediately disconnects from the power grid upon detecting that the residual current exceeds the threshold.

Networking

SUN2000 solar inverters apply to grid-tied systems of large-scale PV plants and commercial distributed grid-tied systems. Typically, a grid-tied PV system consists of the PV string, solar inverter, AC combiner box, and transformer station.

Figure 2-3 Networking

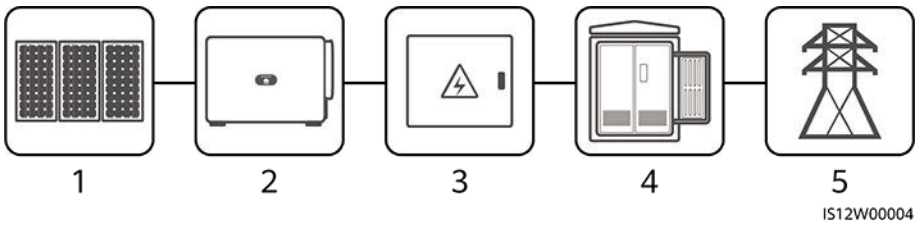

(1) PV string	(2) SUN2000	(3) AC combiner box
(4) Transformer station	(5) Power grid	-

NOTE

In a non-low-voltage grid-connected scenario, the SUN2000-115KTL-M2, SUN2000-100KTL-M2, and SUN2000-100KTL-INM2 need to connect to an isolation transformer and avoid overhead cabling.

Supported Power Grids

SUN2000-115KTL-M2, SUN2000-110KTL-M2, SUN2000-100KTL-M2, and SUN2000-100KTL-INM2 solar inverters support the TN-S, TN-C, TN-C-S, TT, and IT power grids.

 Copyright © Huawei Technologies Co., Ltd.

Figure 2-4 Supported power grids

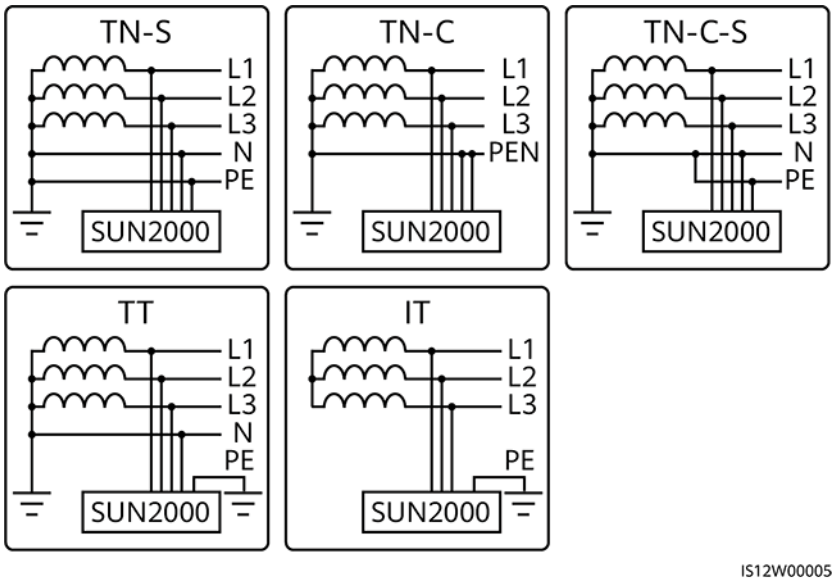

2.3 Label Description

Symbol	Name	Meaning
	Running warning	Potential hazards exist after the inverter is powered on. Take protective measures when operating the inverter.
	Burn warning	Do not touch a running inverter, as the shell becomes hot during operation.
	Large current warning	Before powering on the inverter, ensure that the inverter is grounded because there is a large contact current after the inverter is powered on.
	Delayed discharge	• High voltage exists after the inverter is powered on. Only qualified and trained electrical technicians are allowed to perform operations on the inverter. • Residual voltage exists after the inverter is powered off. It takes 15 minutes for the inverter to discharge to the safe voltage.
	Refer to documentation	Reminds operators to refer to the documents shipped with the inverter.

Symbol	Name	Meaning
	Grounding	Indicates the position for connecting the protective earthing (PE) cable.
	Operation warning	Do not remove the DC input connector when the inverter is running.
	Switching operation warning	The DC switch may fail to switch off automatically when it is not completely closed.
	Switch unloaded warning	This position indicates that the DC switch is in unloaded state. Do not set the DC switch to this position.
	Fan operation warning	High voltage exists after the inverter is powered on. Do not touch the fans when the inverter is working.
	Fan replacement warning	Before replacing a fan, disconnect its power connectors.
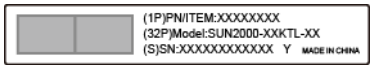	Inverter ESN label	Indicates the inverter serial number.
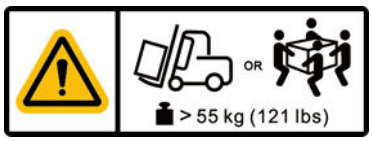	Weight label	The inverter needs to be carried by four persons or using a pallet truck.

2.4 Product Appearance

2.4.1 Appearance

Front View

Figure 2-5 Front view

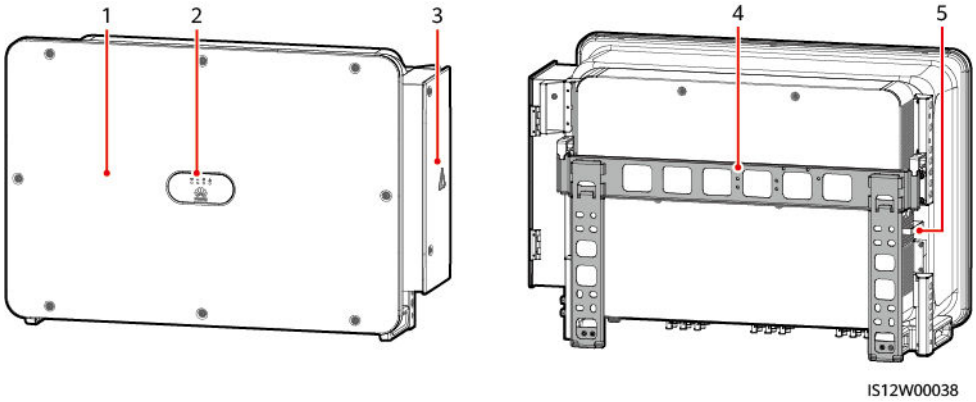

(1) Panel	(2) LED indicators
(3) Maintenance compartment door	(4) Mounting bracket
(5) External fan tray	-

Bottom View

Figure 2-6 Port description

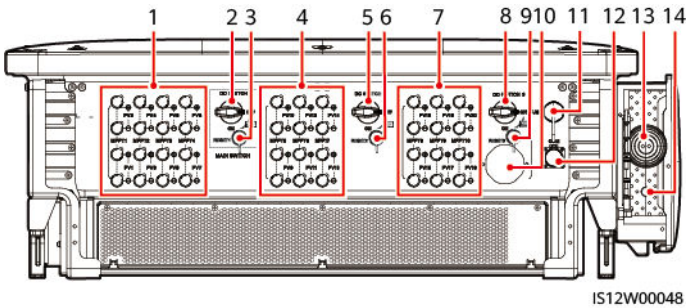

(1) DC input terminal group 1 (PV1–PV8, controlled by DC SWITCH 1)	(2) DC switch 1 (DC SWITCH 1)
(3) Reset button 1 (RESET 1)	(4) DC input terminal group 2 (PV9–PV14, controlled by DC SWITCH 2)
(5) DC switch 2 (DC SWITCH 2)	(6) Reset button 2 (RESET 2)
(7) DC input terminal group 3 (PV15–PV20, controlled by DC SWITCH 3)	(8) DC switch 3 (DC SWITCH 3)
(9) Reset button 3 (RESET 3)	(10) Ventilation valve
(11) USB port	(12) Communications port (COM)
(13) Hole for the AC output power cable	(14) Hole for the tracking system power cable

DC Switch Description

DANGER

The DC switches automatically turn off when a fault occurs in the inverters (LED4 is steady red, and the three DC switches are OFF). In this case, contact your technical support. Do not turn on the DC switches by yourself.

Table 2-2 DC switch description

Switch Component	Description	
DC SWITCH	ON	The DC switch is ON and can automatically turn off for protection.
		The DC switch is ON but cannot automatically turn off for protection.
	OFF	The DC switch is OFF.
RESET	• When the DC switch automatically turns off for protection, the RESET button will be released. • When the RESET button is not pressed, the DC switch can only be turned to the unloaded position, and cannot be set to the ON position.	

Dimensions

Figure 2-7 Dimensions

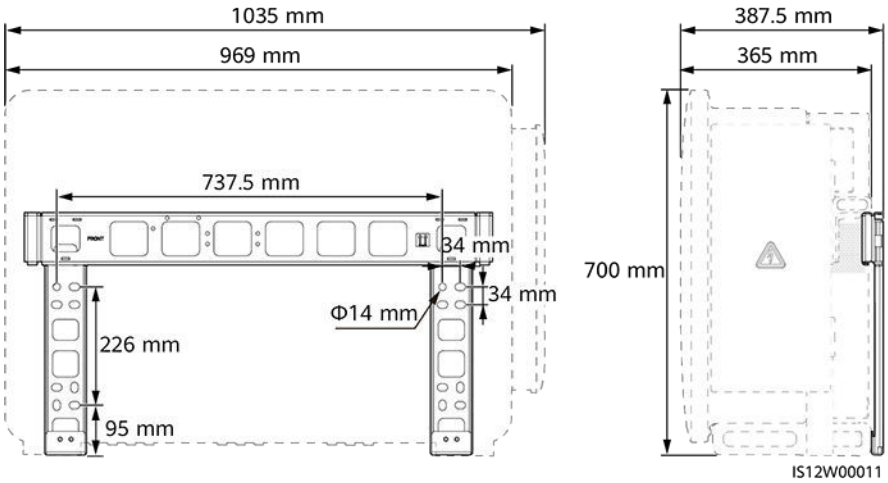

Wiring Area

Figure 2-8 Wiring port

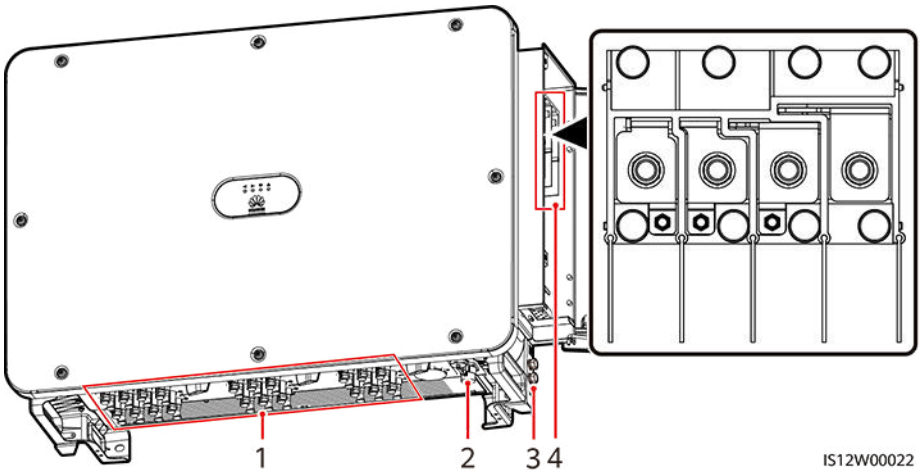

(1) DC input terminals
(2) RS485 port
(3) Ground point on the enclosure
(4) AC terminal block

2.4.2 Indicator Status

Figure 2-9 Indicators

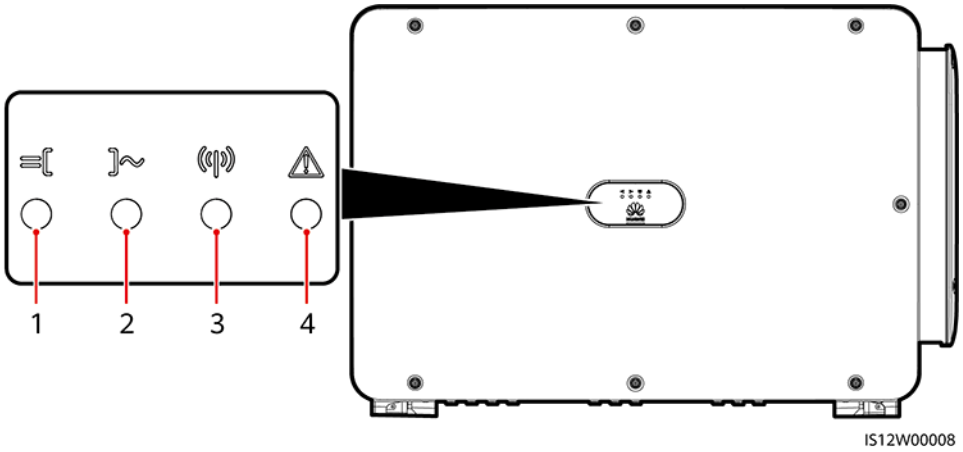

No.	Indicator	Status (Blinking Fast: On for 0.2s and Off for 0.2s; Blinking Slowly: On for 1s and Off for 1s)	Description
1	PV connection indicator	Steady green	At least one PV string is properly connected, and the DC input voltage of the corresponding MPPT circuit is at least 200 V.

No.	Indicator	Status (Blinking Fast: On for 0.2s and Off for 0.2s; Blinking Slowly: On for 1s and Off for 1s)		Description
		Blinking green fast		If the alarm/maintenance indicator is red, an environmental fault at the DC side of the solar inverter is generated.
		Off		The solar inverter disconnects from all PV strings, or the DC input voltage of all MPPT circuits is less than 200 V.
2	Grid connection indicator	Steady green		The solar inverter is in grid-tied mode.
		Blinking green fast		If the alarm/maintenance indicator is red, an environmental fault at the AC side of the solar inverter is generated.
		Off		The solar inverter is not in grid-tied mode.
3	Communications indicator	Blinking green fast		The solar inverter receives communication data normally.
		Off		The solar inverter has not received communication data for 10 seconds.
4	Alarm/ Maintenance indicator	Alarm status	Steady red	A major alarm is generated. ● If the PV connection indicator or grid connection indicator is blinking green fast, troubleshoot DC or AC environmental faults as instructed by the SUN2000 app. ● If the PV connection indicator and grid connection indicator are both not blinking green fast, replace components or the solar inverter as instructed by the SUN2000 app.
			Blinking red fast	A minor alarm is generated.

No.	Indicator	Status (Blinking Fast: On for 0.2s and Off for 0.2s; Blinking Slowly: On for 1s and Off for 1s)		Description
			Blinking red slowly	A warning alarm is generated.
		Local maintenance status	Steady green	Local maintenance succeeds.
			Blinking green fast	Local maintenance fails.
			Blinking green slowly	The solar inverter is in local maintenance or shuts down over a command.

NOTE

- The PV connection indicator and the grid connection indicator preferentially indicate environmental faults.
- Local maintenance refers to operations performed after a USB flash drive, a WLAN module, a Bluetooth module, or a USB data cable is inserted into the USB port of the solar inverter. For example, local maintenance includes data import and export using a USB flash drive, and connecting to the SUN2000 app over a WLAN module, a Bluetooth module, or a USB data cable.
- If an alarm is generated during local maintenance, the alarm/maintenance indicator shows the local maintenance state first. After the USB flash drive, WLAN module, Bluetooth module, or USB data cable is removed, the indicator shows the alarm state.

2.5 Working Principles

2.5.1 Circuit Diagram

The solar inverter receives inputs from 20 PV strings. The inputs are grouped into 10 MPPT circuits inside the solar inverter to track the maximum power point of the PV strings. The DC power is then converted into three-phase AC power through an inverter circuit. Surge protection is supported on both the DC and AC sides.

 Copyright © Huawei Technologies Co., Ltd.

Figure 2-10 Schematic diagram

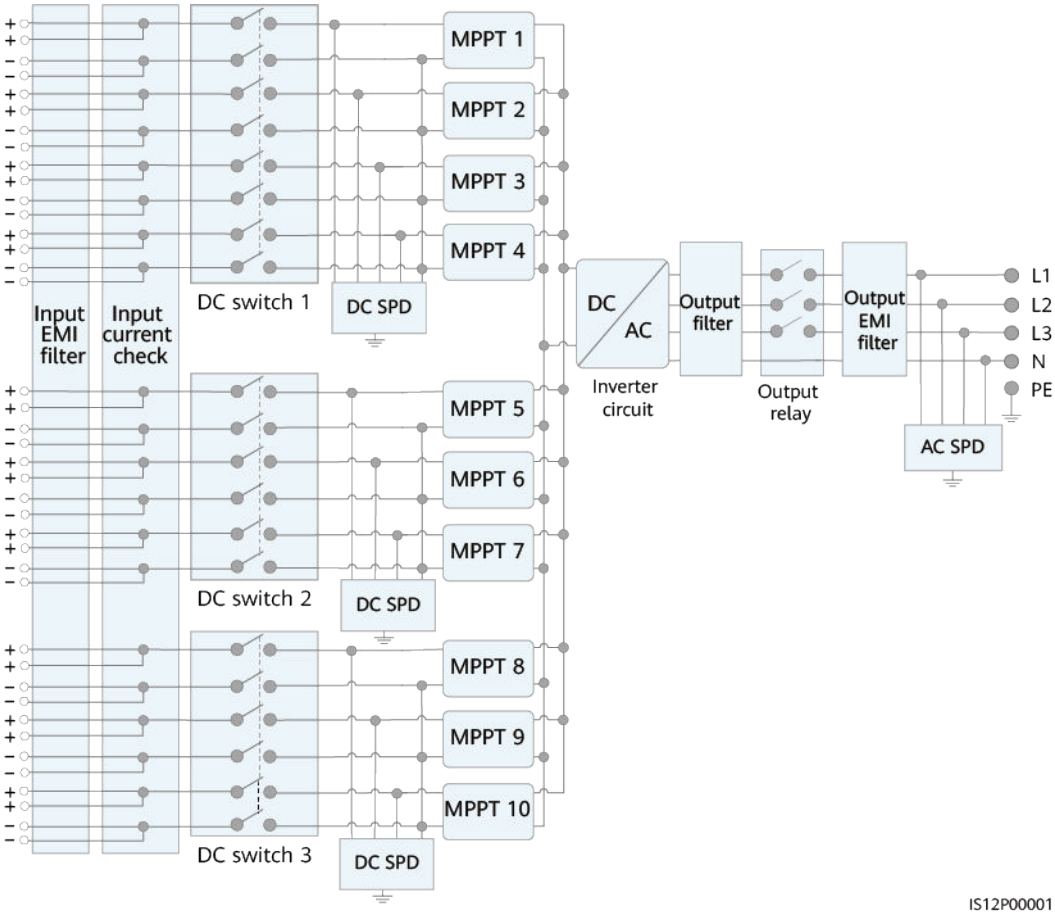

2.5.2 Working Modes

The SUN2000 can work in Standby, Operating, or Shutdown mode.

Figure 2-11 Working modes

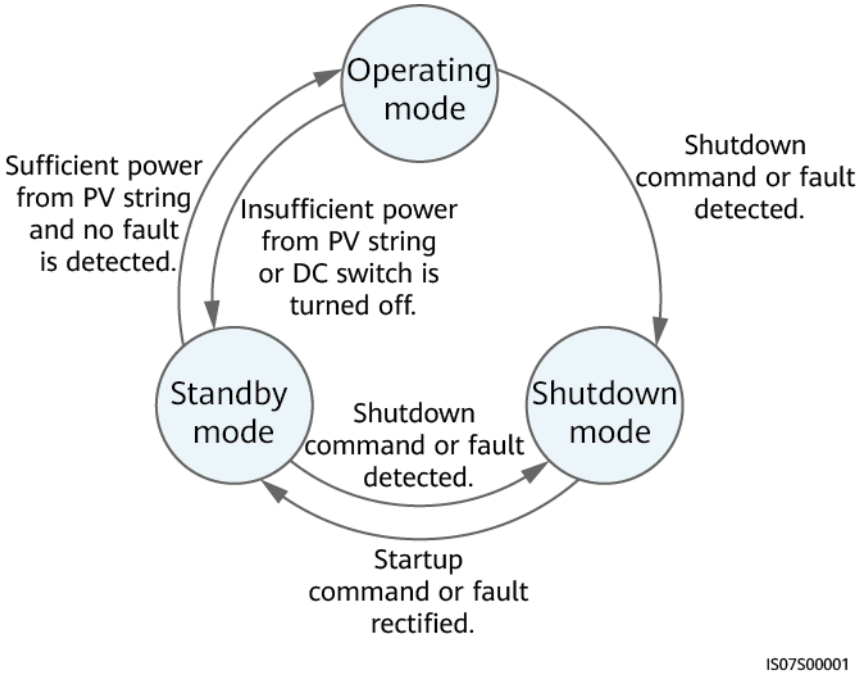

Table 2-3 Working mode description

Working Mode	Description
Standby	The SUN2000 enters Standby mode when the external environment does not meet the operating requirements. In Standby mode: ● The SUN2000 continuously performs status check and enters the Operating mode once the operating requirements are met. ● The SUN2000 enters Shutdown mode after detecting a shutdown command or a fault after startup.
Operating	In Operating mode: ● The SUN2000 converts DC power from PV strings into AC power and feeds the power to the power grid. ● The SUN2000 tracks the maximum power point to maximize the PV string output. ● If the SUN2000 detects a fault or a shutdown command, it enters the Shutdown mode. ● The SUN2000 enters Standby mode after detecting that the PV string output power is not suitable for connecting to the power grid for generating power.
Shutdown	● In Standby or Operating mode, the SUN2000 enters Shutdown mode after detecting a fault or shutdown command. ● In Shutdown mode, the SUN2000 enters Standby mode after detecting a startup command or that the fault is rectified.

 Copyright © Huawei Technologies Co., Ltd.

3 Solar Inverter Storage

The following requirements should be met if the solar inverter is not put into use immediately:

- Do not remove the packing materials, and check the packing materials regularly (recommended: every three months). If any rodent bites are found, replace the packing materials immediately. If the solar inverter is unpacked but not put into use immediately, put it inside the original package with the desiccant bag, and seal it using tape.
- The ambient temperature and humidity should be suitable for the storage. The air must not contain corrosive or flammable gases.

Figure 3-1 Storage temperature and humidity

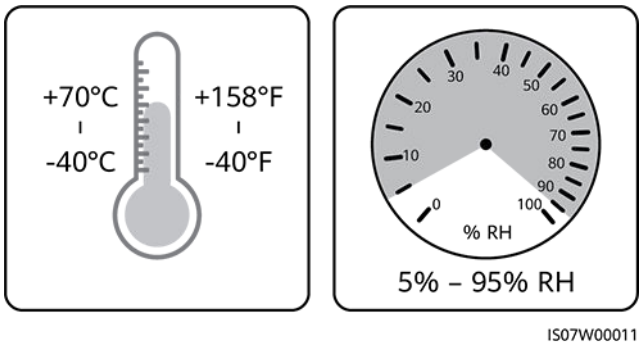

- The solar inverter should be stored in a clean and dry place and be protected from dust and water vapor corrosion. The solar inverter must be protected against rain and water.
- Do not tilt the package or place it upside down.
- To avoid personal injury or device damage, stack inverters with caution to prevent them from falling over.

 Copyright © Huawei Technologies Co., Ltd.

Figure 3-2 Maximum number of stacking layers allowed

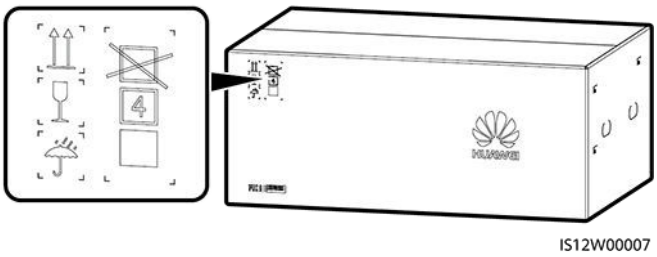

- If the solar inverter has been stored for more than two years, it must be checked and tested by professionals before being put into use.

4 Installation

4.1 Check Before Installation

Checking Outer Packing Materials

Before unpacking the solar inverter, check the outer packing materials for damage, such as holes and cracks, and check the solar inverter model. If any damage is found or the solar inverter model is not what you requested, do not unpack the package and contact your supplier as soon as possible.

NOTE

You are advised to remove the packing materials within 24 hours before installing the solar inverter.

Checking Accessories

After unpacking the solar inverter, check that the components are intact and complete. If any damage is found or any component is missing, contact your dealer.

NOTE

For details about the number of accessories delivered with the solar inverter, see the *Packing List* in the packing case.

 Copyright © Huawei Technologies Co., Ltd.

4.2 Tools

Category	Tool			
Installation tools	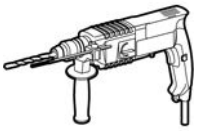 Hammer drill	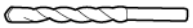 Drill bit (Φ14 mm and Φ16 mm)	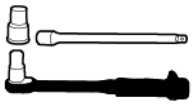 Insulated torque socket wrench (including an extension bar ≥ 50 mm)	Phillips insulated torque screwdriver
	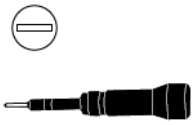 Flat-head insulated torque screwdriver	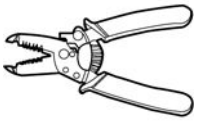 Wire strippers	Flat-head screwdriver (head: M3)	Rubber mallet
	Utility knife	Cable cutter	Crimping tool Model: H4TC0003 Manufacturer: AMPHENOL (For Amphenol Helios H4 connectors only)	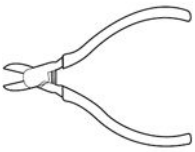 Diagonal pliers

Category	Tool			
	Open-end wrench Model: H4TW0001 Manufacturer: AMPHENOL (For Amphenol Helios H4 connectors only)	Vacuum cleaner	Multimeter (DC voltage measurement range ≥ 1100 V DC)	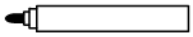 Marker
	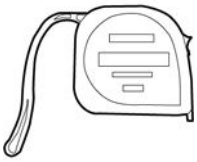 Measuring tape	Bubble or digital level	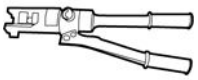 Hydraulic pliers	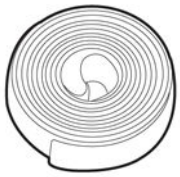 Heat shrink tubing
	Heat gun	Cable tie	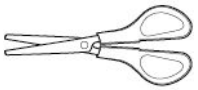 Scissors	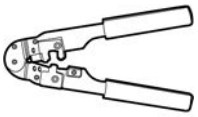 RJ45 crimping tool
Personal protective equipment (PPE)	Insulated gloves	Safety goggles	Dust mask	Safety shoes
	Safety helmet	Reflective vest	Protective gloves	-

 Copyright © Huawei Technologies Co., Ltd.

4.3 Determining the Installation Position

Installation Environment Requirements

- Do not install the inverter in working or living areas.
- If the device is installed in public places (such as parking lots, stations, and factories) other than working and living areas, install a protective net outside the device, set up a safety warning sign to isolate the device, and prevent unauthorized personnel from approaching the inverter. This is to avoid personal injury or property loss caused by accidental contact or other reasons during device operation.
- If inverters are installed in a place with abundant vegetation, in addition to routine weeding, harden the ground underneath the inverters using cement or gravel (recommended area: 3 m x 2.5 m).
- Do not install the inverter in areas with flammable materials.
- Do not install the inverter in areas with explosive materials.
- Do not install the inverter in areas with corrosive materials.
- Do not install the inverter where its enclosure and heat sinks are easily accessible, because the voltage is high and these parts are hot during operation.
- Install the inverter in a well-ventilated environment for heat dissipation
- If the inverter is installed in an airtight environment, a heat dissipation device or ventilation device must be installed to ensure that the indoor ambient temperature is not higher than the external ambient temperature during operation.
- You are advised to install the inverter in a sheltered place or install an awning over it.
- The inverter will be corroded in salt areas. Before installing the inverter outdoors in salt areas, consult Huawei. A salt area refers to the region within 500 meters from the coast or prone to sea breeze. The regions prone to sea breeze vary with weather conditions (such as typhoons and monsoons) or terrains (such as dams and hills).

Mounting Structure Requirements

- The mounting structure where the solar inverter is installed must be fire resistant. Do not install the solar inverter on flammable building materials.
- Ensure that the installation surface is solid enough to bear the solar inverter.
- In residential areas, do not install the solar inverter on drywalls or walls made of similar materials with a weak sound insulation performance because the noise generated by the solar inverter may interfere with residents.

 Copyright © Huawei Technologies Co., Ltd.

Figure 4-1 Mounting structure

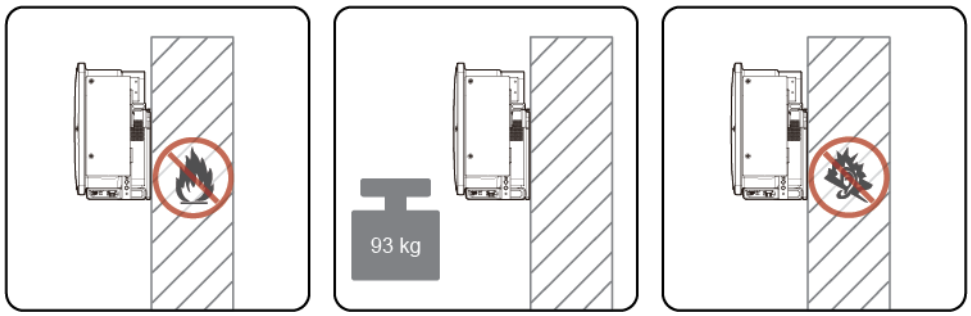

Installation Angle Requirements

The solar inverter can be support-mounted or wall-mounted. The installation angle requirements are as follows:

- Install the solar inverter vertically or at a maximum back tilt of 75 degrees to facilitate heat dissipation.
- Do not install the solar inverter at forward tilted, excessive back tilted, side tilted, horizontal, or upside down positions.

Figure 4-2 Angle

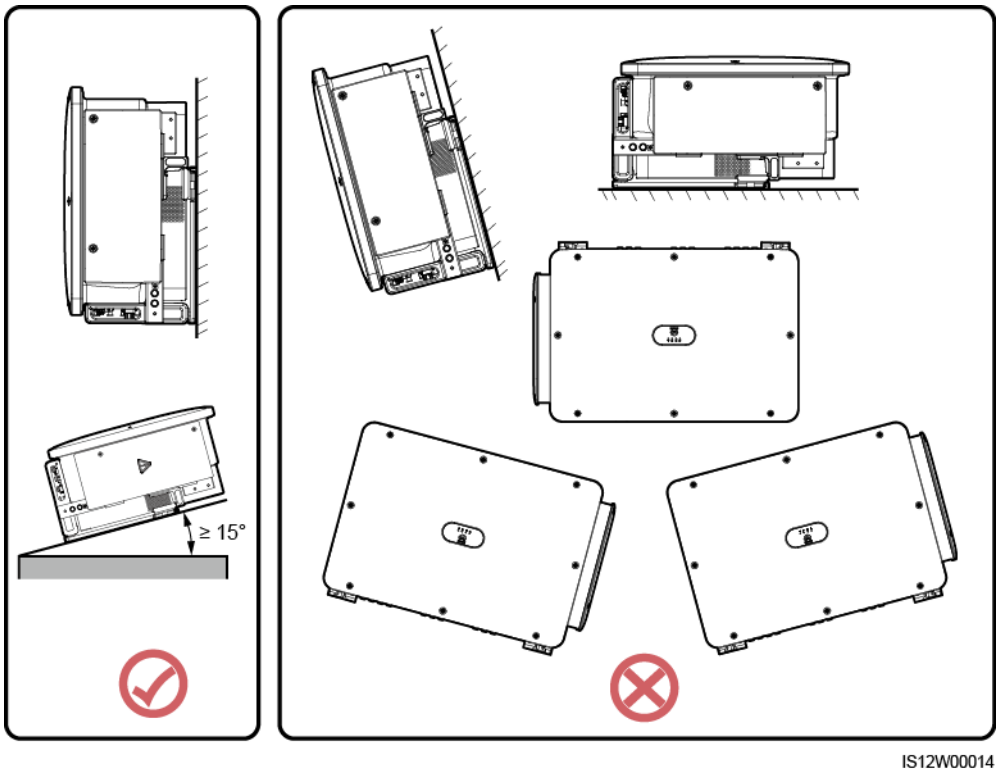

Installation Dimensions Requirements

Reserve enough space around the solar inverter for installation and heat dissipation.

Figure 4-3 Installation clearance

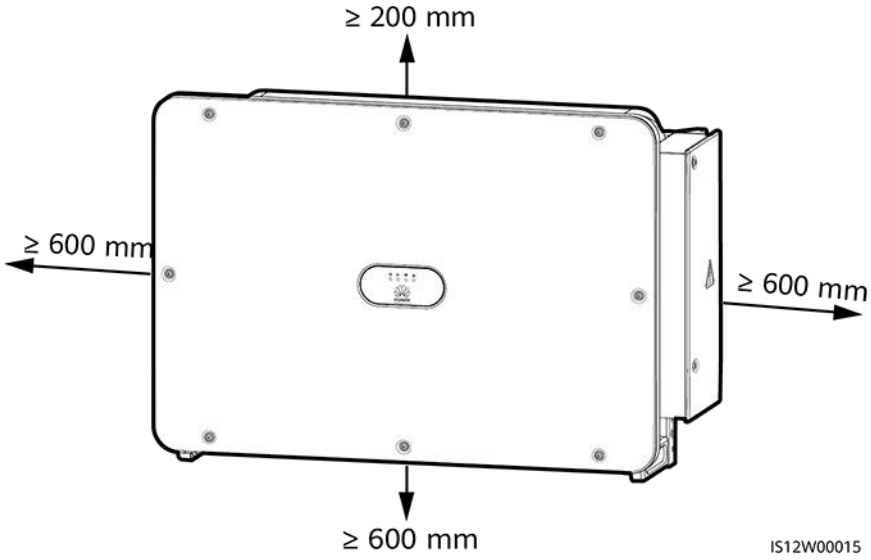

NOTE

For ease of installing the solar inverter on the mounting bracket, connecting cables to the bottom of the solar inverter, and maintaining the solar inverter in future, it is recommended that the bottom clearance be between 600 mm and 730 mm. If you have any question about the clearance, consult the local technical support engineers.

When installing multiple solar inverters, install them in horizontal mode if sufficient space is available and install them in triangle mode if no sufficient space is available. Stacked installation is not recommended.

Figure 4-4 Horizontal installation mode (recommended)

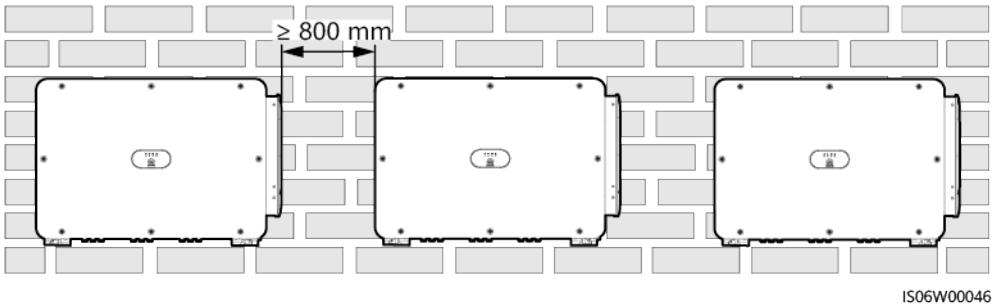

Figure 4-5 Triangle installation mode (recommended)

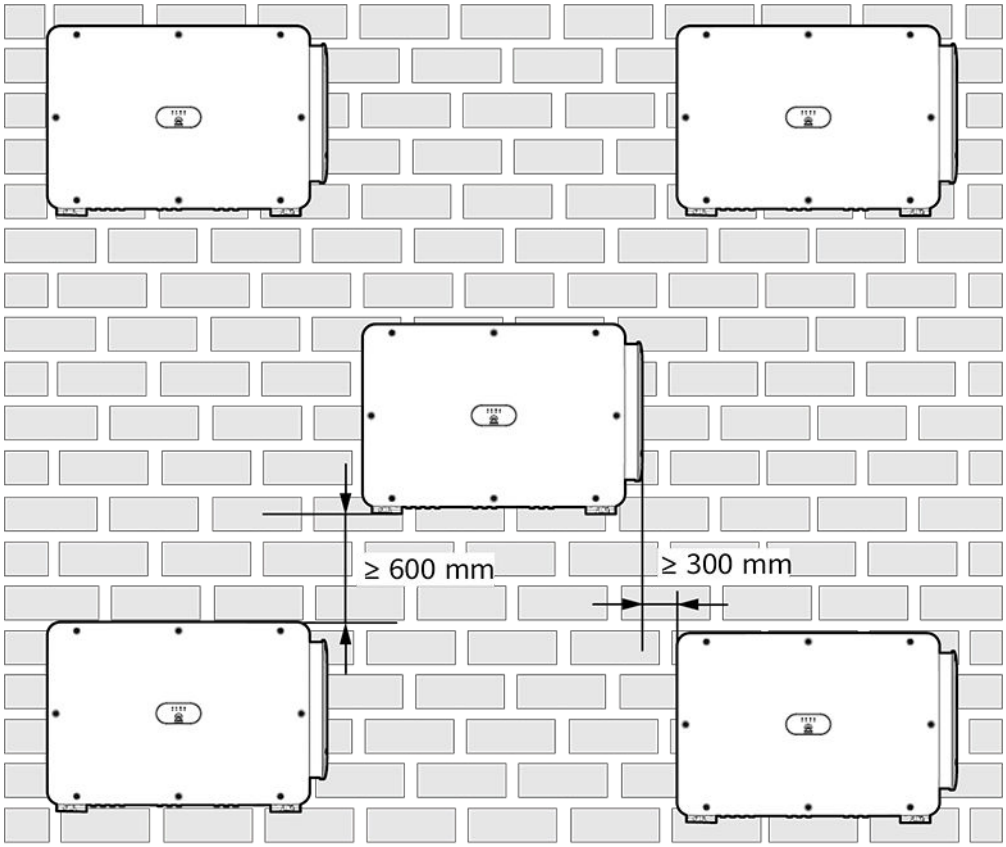

IS12W00017

Figure 4-6 Stacked installation mode (not recommended)

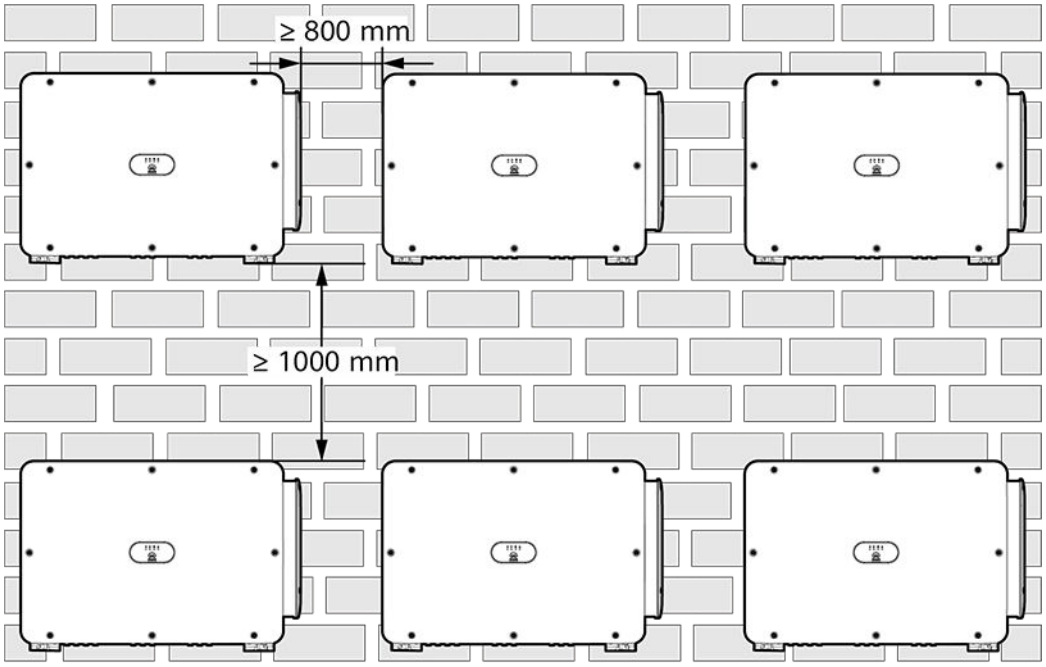

IS12W00018

4.4 Installing the Mounting Bracket

Before installing the mounting bracket, remove the security Torx wrench and keep it for later use.

Figure 4-7 Position for binding the security Torx wrench

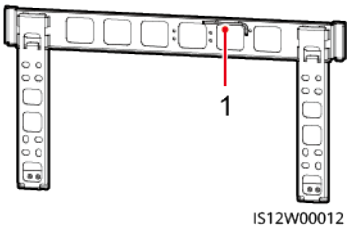

(1) Security Torx wrench

The mounting bracket of the solar inverter has four groups of tapped holes, each group containing four tapped holes. Mark any hole in each group based on site requirements and mark four holes in total. The two round holes are recommended.

Figure 4-8 Hole dimensions

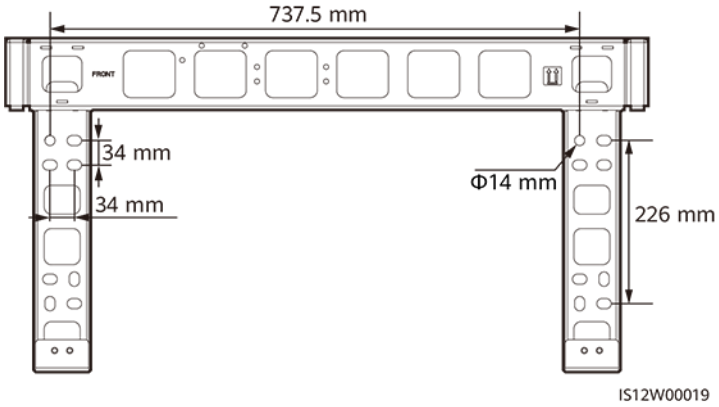

4.4.1 Support-mounted Installation

Prerequisites

M12x40 bolt assemblies are supplied with the mounting bracket. If the bolt length does not meet the installation requirements, prepare M12 bolt assemblies by yourself and use them together with the supplied M12 nuts.

Procedure

Step 1 Determine the positions for drilling holes using the mounting bracket. Level the positions of mounting holes using a bubble or digital level, and mark the positions with a marker.

Step 2 Drill holes using a hammer drill. It is recommended that anti-rust measures be taken on the positions for drilling holes.

Step 3 Secure the mounting bracket.

Figure 4-9 Installing the mounting bracket

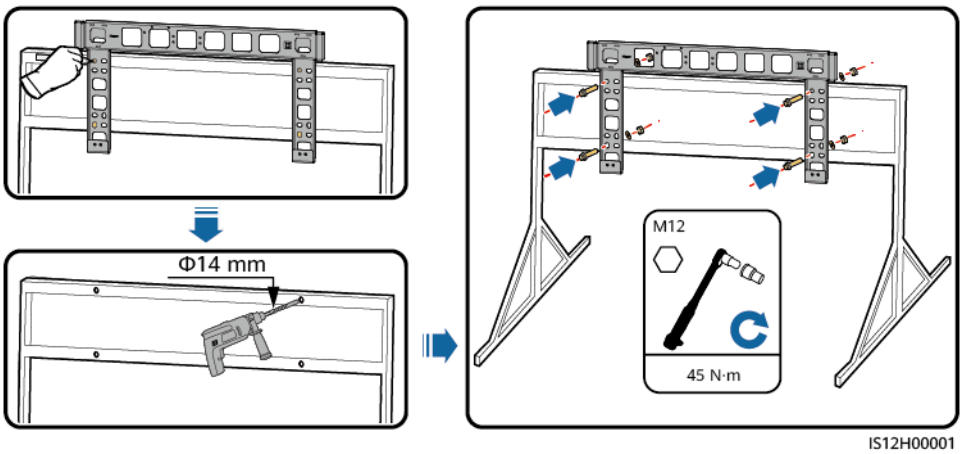

----End

4.4.2 Wall-mounted Installation

Prerequisites

You have prepared expansion bolts. M12x60 stainless steel expansion bolts are recommended.

Procedure

Step 1 Determine the positions for drilling holes using the mounting bracket. Level the positions of mounting holes using a bubble or digital level, and mark the positions with a marker.

Step 2 Drill holes using a hammer drill and install expansion bolts.

WARNING

Avoid drilling holes in the position of the wall with water pipes and power cables buried inside.

NOTICE

- To prevent dust inhalation or contact with eyes, wear safety goggles and an anti-dust respirator when drilling holes.
- Clean up any dust in and around the holes using a vacuum cleaner and measure the distance between holes. If the holes are inaccurately positioned, drill a new set of holes.
- Level the head of the expansion sleeve with the concrete wall after removing the bolt, spring washer, and flat washer. Otherwise, the mounting bracket will not be securely installed on the wall.

Step 3 Secure the mounting bracket.

Figure 4-10 Installing the mounting bracket

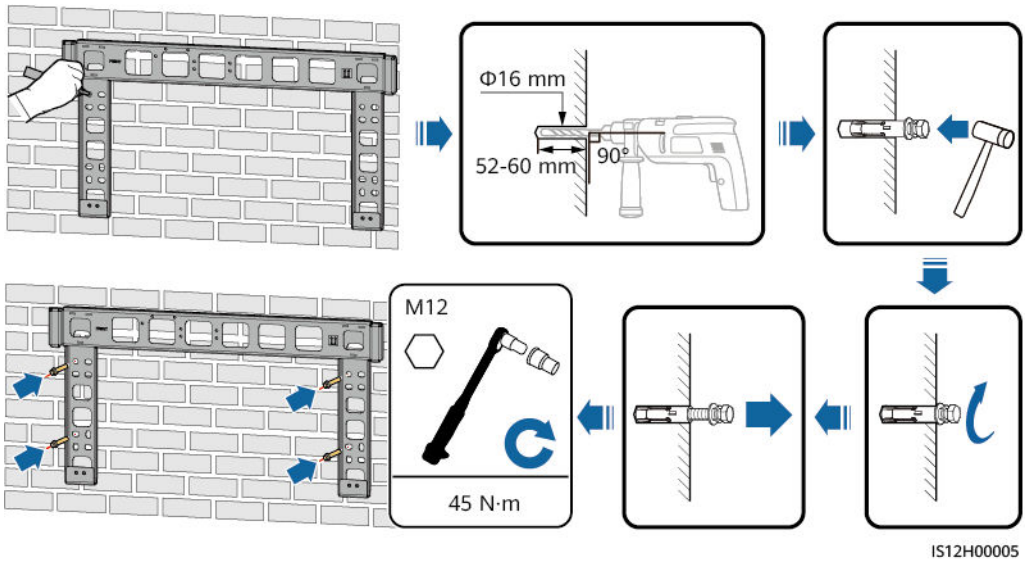

----End

4.5 Installing a Solar Inverter

Context

NOTICE

- Move the solar inverter with care to prevent device damage and personal injury.
- It takes multiple persons or a pallet truck to move the solar inverter.
- Do not use the ports and wiring terminals at the bottom to support any weight of the solar inverter.
- When you need to temporally place the solar inverter on the ground, use foam, paper, or other protection material to prevent damage to its cover.
- Use lifting handles to facilitate installation, which are optional and delivered separately. Ensure that the lifting handles are securely installed. After the installation is complete, remove the lifting handles and keep them properly.
- To avoid damage to the equipment, do not lift or hoist a solar inverter with an improper hold as shown in **Figure 4-12**.

Figure 4-11 Positions for installing the lifting handles

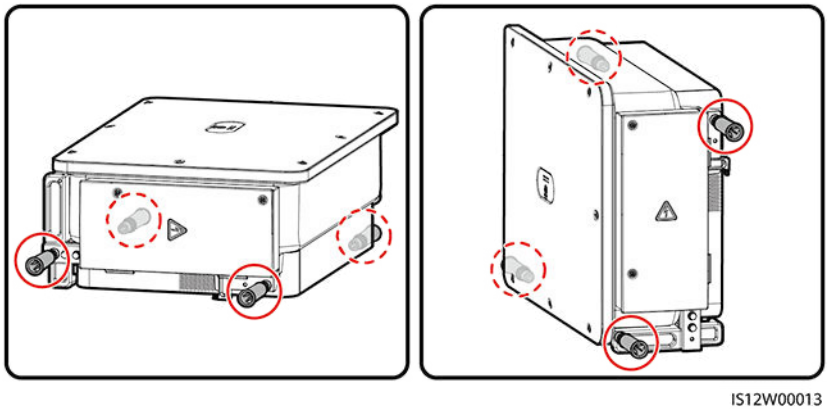

(A) Transportation scenario (B) Installation scenario

Figure 4-12 Lifting positions

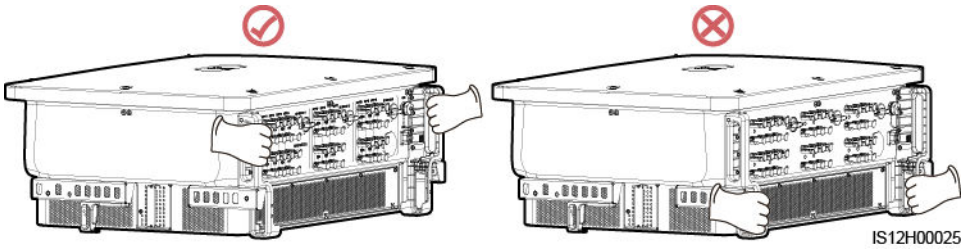

Procedure

Step 1 Lift the solar inverter from the packing case and move it to the installation position.

Figure 4-13 Taking out the solar inverter

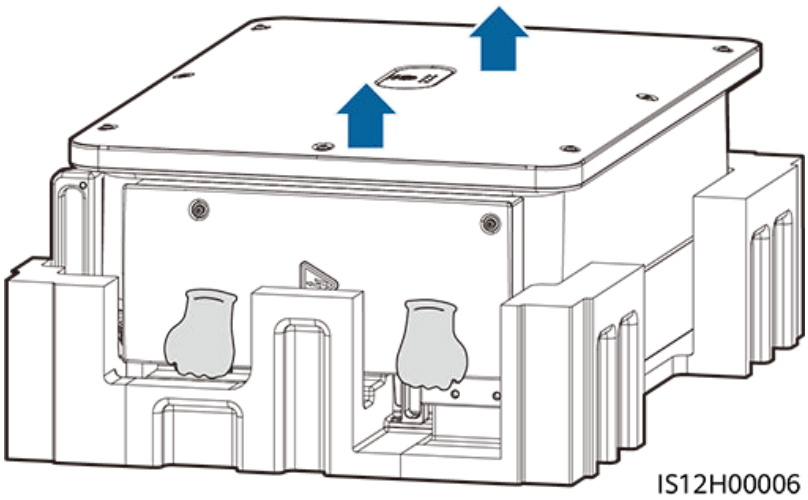

Step 2 Lift the solar inverter and keep it upright.

Figure 4-14 Lifting the solar inverter and keeping it upright

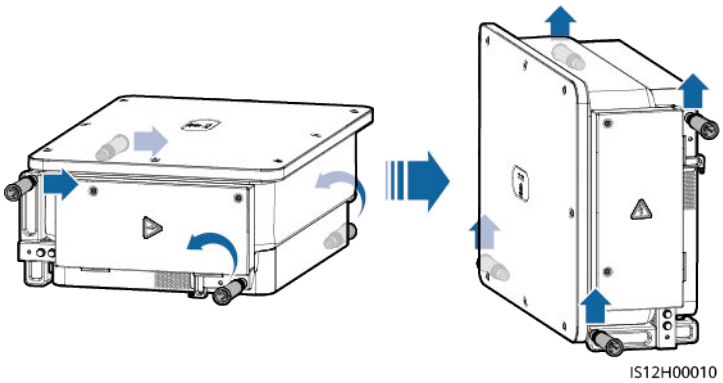

Step 3 If the installation position is too high to install the solar inverter on the mounting bracket, run a rope that is strong enough to bear the solar inverter through the two lifting eyes, and hoist the solar inverter.

NOTICE

Hoist the solar inverter with care to protect it from colliding with the wall or other objects.

 Copyright © Huawei Technologies Co., Ltd.

Figure 4-15 Hoisting the solar inverter

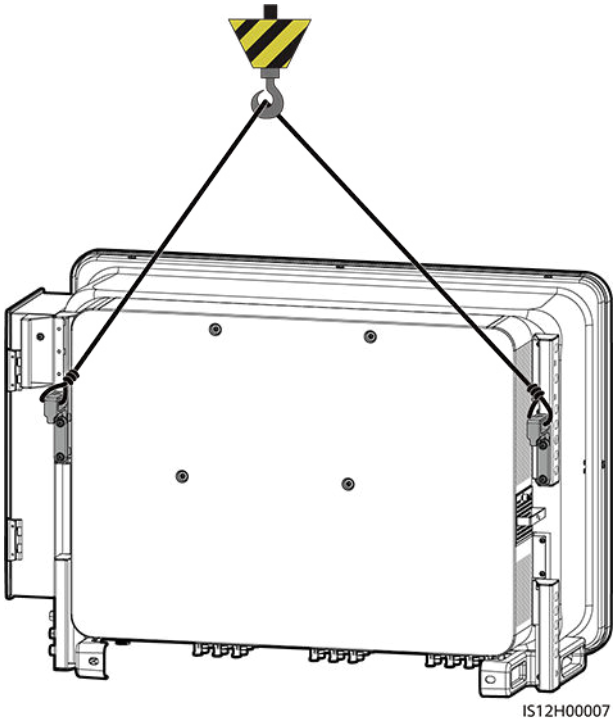

Step 4 Install the solar inverter on the mounting bracket and align the solar inverter enclosure with the mounting bracket.

Figure 4-16 Mounting the solar inverter

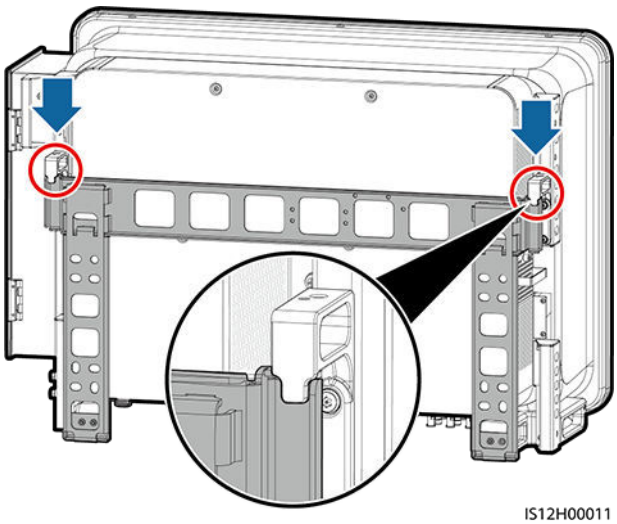

Step 5 Secure the solar inverter.

Figure 4-17 Tightening security Torx screws

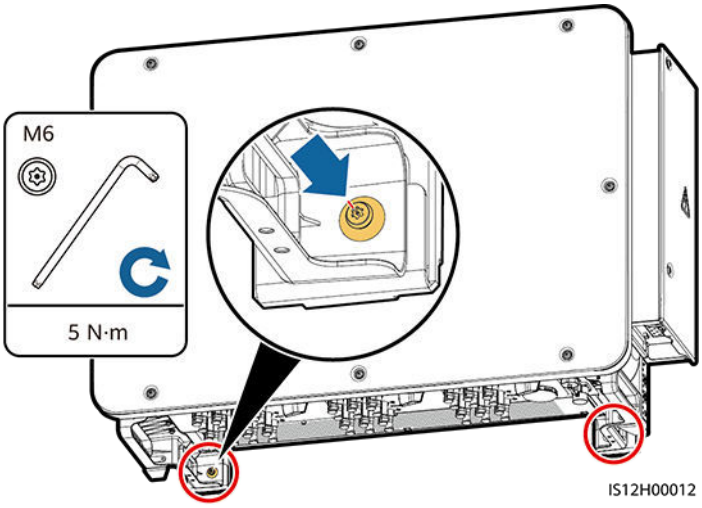

----End

 Copyright © Huawei Technologies Co., Ltd.

5 Electrical Connections

5.1 Precautions

DANGER

After the PV array receives solar irradiance, it transmits the DC voltage to the solar inverter. Before connecting cables, ensure that the three DC switches on the solar inverter are set to OFF. Otherwise, the high voltage of the solar inverter may result in electric shocks.

WARNING

- The device damage caused by incorrect cable connections is beyond the warranty scope.
- Only qualified technicians can perform operations about electrical connection.
- Wear proper PPE at all time when connecting cables.
- To prevent poor cable connection due to overstress, leave enough slack before connecting the cables to the appropriate ports.

NOTE

The cable colors shown in the electrical connection diagrams provided in this chapter are for reference only. Select cables in accordance with local cable specifications (green-and-yellow cables are only used for protective earthing).

5.2 Preparing Cables

SUN2000 solar inverters support RS485 communication and MBUS communication.

 Copyright © Huawei Technologies Co., Ltd.

NOTICE

The MBUS communication is applicable to medium-voltage grid connection scenarios and non-low-voltage public grid connection scenarios (industrial environment).

NOTE

In the networking diagram, — indicates the power cable, → indicates the power flow direction, and — and ∧∧∧ indicate the signal flow.

Figure 5-1 RS485 networking (SmartLogger)

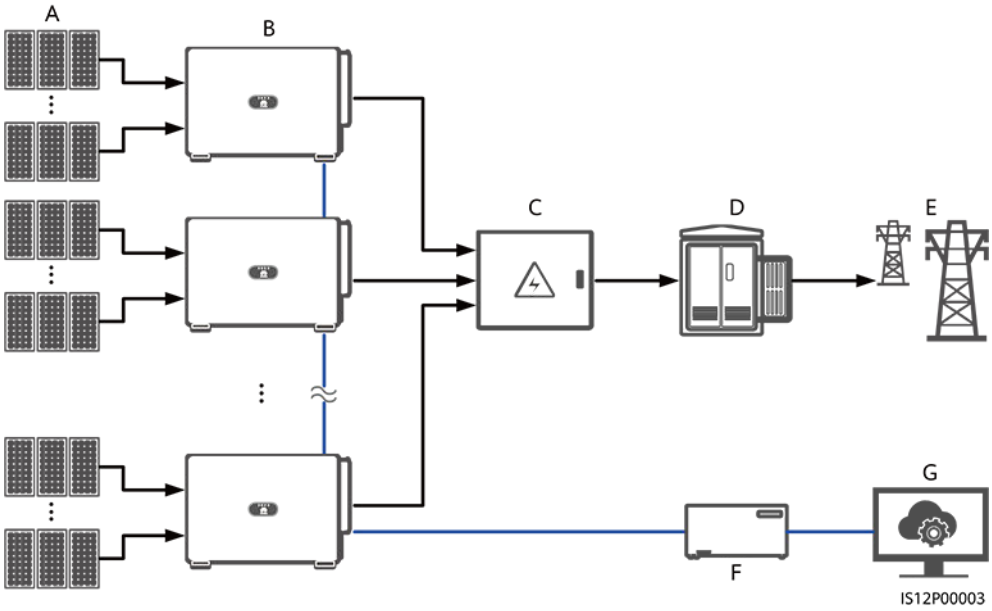

(A) PV string	(B) SUN2000	(C) AC combiner box
(D) Transformer station	(E) Power grid	(F) SmartLogger
(G) Management system	-	-

Copyright © Huawei Technologies Co., Ltd.

Figure 5-2 RS485 networking (SDongle)

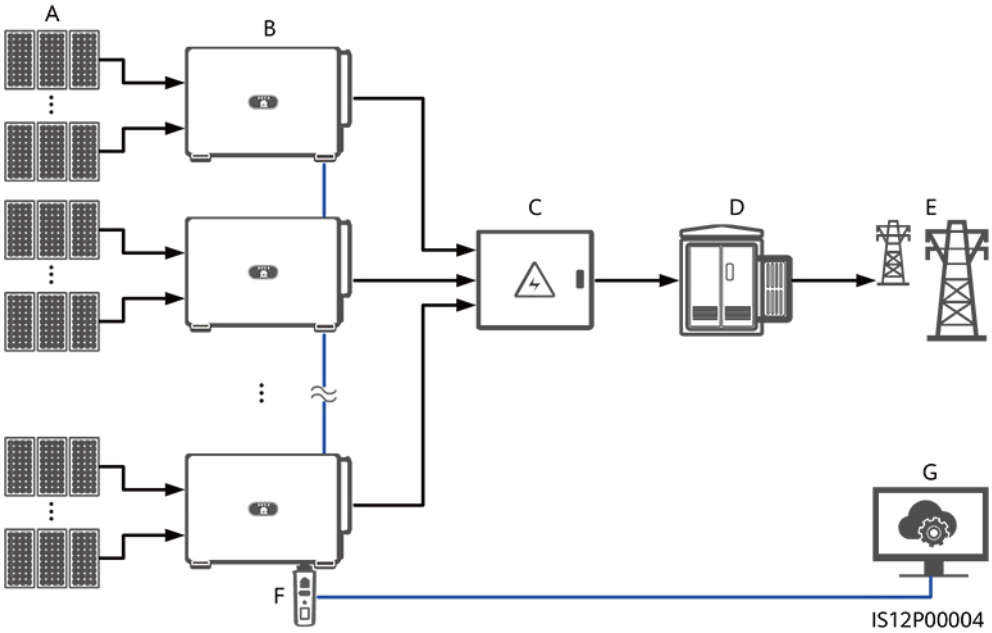

(A) PV string	(B) SUN2000	(C) AC combiner box
(D) Transformer station	(E) Power grid	(F) SDongle
(G) Management system	-	-

Figure 5-3 MBUS networking (SmartLogger)

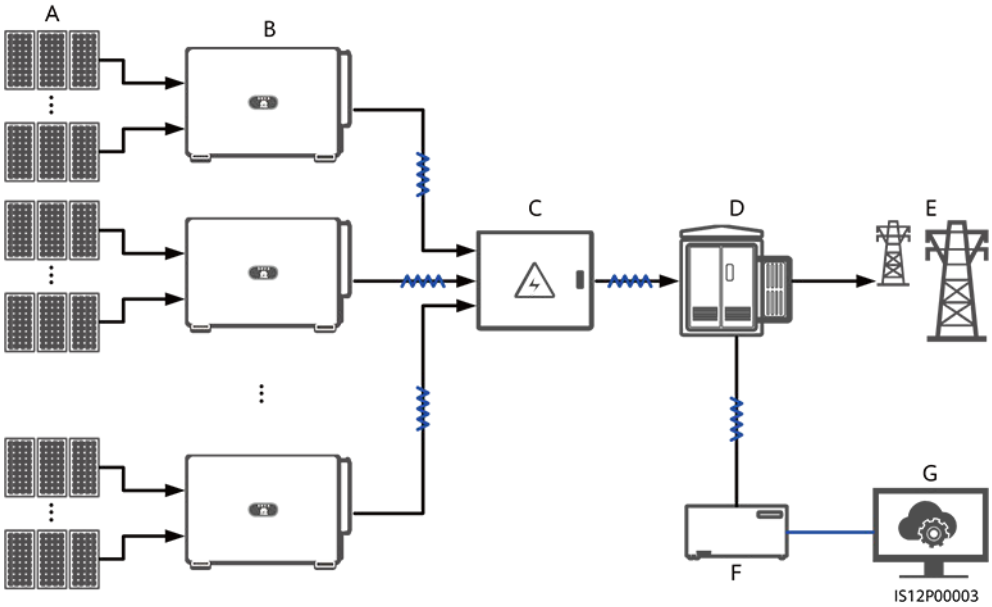

(A) PV string	(B) SUN2000	(C) AC combiner box
(D) Transformer station	(E) Power grid	(F) SmartLogger
(G) Management system	-	-

Copyright © Huawei Technologies Co., Ltd.

Figure 5-4 MBUS networking (SDongle)

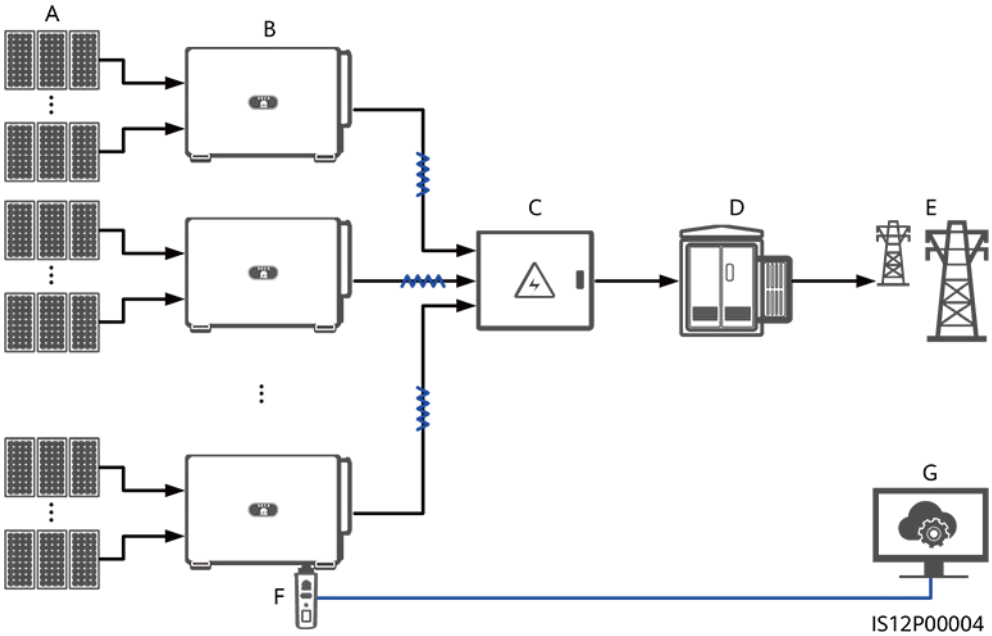

(A) PV string	(B) SUN2000	(C) AC combiner box
(D) Transformer station	(E) Power grid	(F) SDongle
(G) Management system	-	-

NOTICE

- To ensure the system response speed, it is recommended that less than 30 solar inverters be connected to each COM port on the SmartLogger and that less than 10 solar inverters be cascaded over the SDongle.
- The RS485 communication distance between the last solar inverter and the SmartLogger cannot exceed 1000 m.

 Copyright © Huawei Technologies Co., Ltd.

Figure 5-5 Cable connections (configure the components in the dotted box as required)

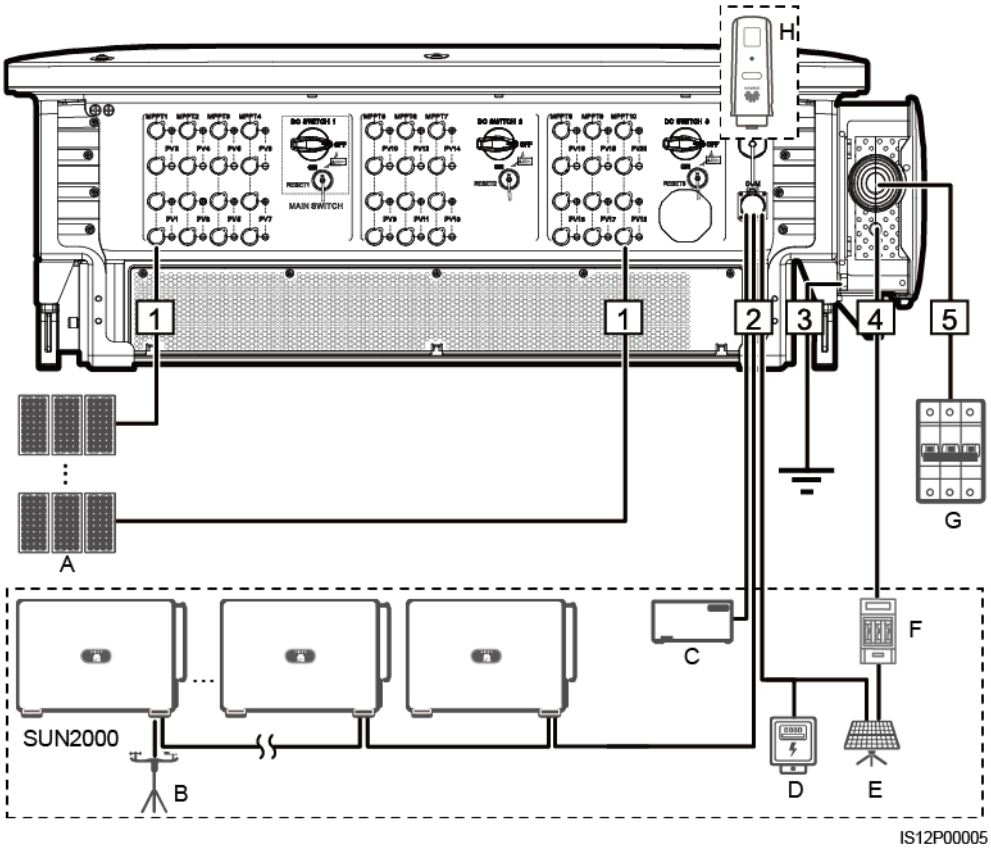

Table 5-1 Components

No.	Component	Description	Source
A	PV string	• PV strings consist of PV modules in series. • A solar inverter supports 20 PV string inputs.	Prepared by the customer
B	Environmental monitoring instrument (EMI)	• When the SmartLogger is used, the EMI can be directly connected to the SmartLogger or connected to the last solar inverter cascaded over RS485. • When the SDongle is used, the EMI is a cascaded device that needs to be connected to the solar inverter where the SDongle is installed.	Prepared by the customer
C	SmartLogger	The solar inverter communicates with the management system through the SmartLogger.	Purchased from the Company

No.	Component	Description	Source
D	Power Meter	Implements power control at the grid-tied point in low voltage scenarios using a power meter.	Prepared by the customer
E	Support tracking system	Adjusts the angle of the supports.	Prepared by the customer
F	Fuse/Circuit breaker	The tracking system should be equipped with an overcurrent protection device or component. The power cable between the device or component and the wiring terminal should be no longer than 2.5 m. Therefore, a fuse or a circuit breaker is recommended. ● Installed between the solar inverter and tracking control box ● Fuse specifications: rated voltage ≥ 500 V; rated current: 16 A; protection: gG ● Circuit breaker specifications: rated voltage ≥ 500 V; rated current: 16 A; tripping: C	Prepared by the customer
G	AC switch	● Installed in the AC combiner box ● Recommended: a three-phase AC circuit breaker with a rated voltage greater than or equal to 500 V AC and a rated current of 250 A	Prepared by the customer
H	SDongle	The solar inverter communicates with the management system through the SDongle.	Purchased from the Company

NOTICE

The solar inverter has an RCMU inside. Its external AC switch should be a three-phase circuit breaker or other AC load circuit breakers to safely disconnect the solar inverter from the power grid.

NOTE

- The cable size must comply with local cable standards.
- The factors that affect cable selection include the rated current, cable type, routing mode, ambient temperature, and maximum expected line loss.
- If MBUS is used for communication, you are advised to use multi-core cables with the maximum communication distance of 1000 m. To use other types of AC power cables, contact local technical support.

 Copyright © Huawei Technologies Co., Ltd.

Table 5-2 Cable description (S: cross-sectional area of the AC cable conductor; S_p: cross-sectional area of the PE cable conductor)

No.	Cable	Category	Conductor Cross-Sectional Area Range	Outer Diameter	Source
1	DC input power cable	PV cable that meets the 1100 V standard	4–6 mm^2	5.5–9 mm	Prepared by the customer
2	RS485 communications cable	Outdoor shielded twisted pair that meets the local standard	0.25–1 mm^2	• One or two communications cables: 4–11 mm • Three communications cables: 4–8 mm	Prepared by the customer
3	PE cable[1]	Single-core outdoor copper cable and M10 OT/DT terminals	$S_p \geq S/2$	-	Prepared by the customer
4	Tracking system power cable	Three-core outdoor copper cable with dual-layer protection	10 mm^2	15–18 mm	Prepared by the customer

 Copyright © Huawei Technologies Co., Ltd.

No.	Cable	Category	Conductor Cross-Sectional Area Range	Outer Diameter	Source
5	AC output power cable (multi-core)	● If you connect a ground cable to the ground point on the device enclosure and the neutral wire is not used, you are advised to use a three-core (L1, L2, and L3) outdoor cable and M12 OT/DT terminals (L1, L2, and L3). ● If you connect a PE cable to the ground point in the maintenance compartment and the neutral wire is not used, you are advised to use a four-core (L1, L2, L3, and PE) outdoor cable, M12 OT/DT terminals (L1, L2, and L3), and M10 OT/DT terminals (PE). ● If you connect a ground cable to the ground point on the device enclosure and the neutral wire is used, you are advised to use a four-core (L1, L2, L3, and N) outdoor cable and M12 OT/DT terminals (L1, L2, L3, and N). ● If you connect a PE cable to the ground point in the maintenance compartment and the neutral wire is used, you are advised to use a five-core (L1, L2, L3, N, and PE) outdoor cable, M12 OT/DT terminals (L1, L2, L3, and N), and M10 OT/DT terminals (PE).	● Copper cable: – S: 70–240 mm^2 – $S_p \geq S/2$ ● Aluminum alloy cable or copper-clad aluminum cable: – S: 95–240 mm^2 – $S_p \geq S/2$	24–66 mm	Prepared by the customer

 Copyright © Huawei Technologies Co., Ltd.

No.	Cable	Category	Conductor Cross-Sectional Area Range	Outer Diameter	Source
	AC output power cable (single-core)	You are advised to use a single-core outdoor cable and M12 OT/DT terminals.	• Copper cable: S: 70–240 mm^2 • Aluminum alloy cable or copper-clad aluminum cable: S: 95–240 mm^2	14–32 mm	Prepared by the customer
Note [1]: The value of S_p is valid only if the conductors of the PE cable and AC power cable use the same material. If the materials are different, ensure that the conductor of the PE cable with a proper cross-sectional area produces a conductance equivalent to that of the cable specified in the table. The specifications of the PE cable are subject to this table or calculated according to IEC 60364-5-54.					

5.3 Connecting the PE Cable

Context

NOTICE

- Proper grounding is helpful for resisting the impact of surge voltage and improving the electromagnetic interference (EMI) performance. Before connecting the AC power cable, DC power cables, and communications cable, connect the PE cable to the PE point.
- You are advised to choose the ground point on the enclosure. The ground point in the maintenance compartment is used for connecting to the PE cable contained in the multi-core AC power cable.
- It is recommended that the PE cable of the solar inverter be connected to a nearby ground point. Connect the PE points of all solar inverters in the same array to ensure equipotential connections to PE cables.

Procedure

Step 1 Connect the PE cable to the PE point.

 Copyright © Huawei Technologies Co., Ltd.

Figure 5-6 Connecting the PE cable to the PE point (on the enclosure)

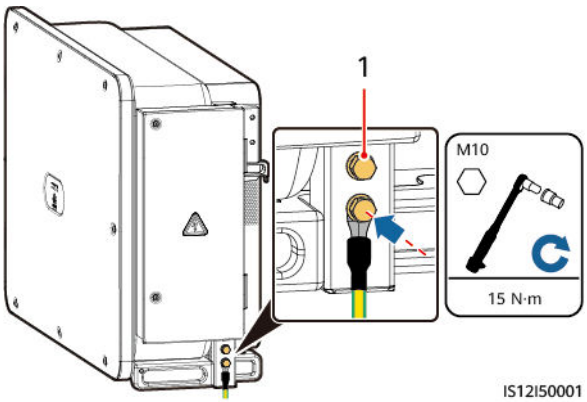

(1) Reserved PE point

----End

Follow-up Procedure

To enhance the corrosion resistance of a ground terminal, apply silica gel or paint on it after connecting the PE cable.

5.4 Opening the Maintenance Compartment Door

Precautions

CAUTION

- Do not open the panel cover of the solar inverter.
- Before opening the maintenance compartment door, ensure that no electrical connections are made for the solar inverter on the AC or DC side.
- Do not open the maintenance compartment door on rainy or snowy days. If you need to, take protective measures to prevent rain or snow from entering the maintenance compartment.
- Do not leave unused screws in the maintenance compartment.

Procedure

Step 1 Open the maintenance compartment door and install the support bar.

Figure 5-7 Opening the maintenance compartment door

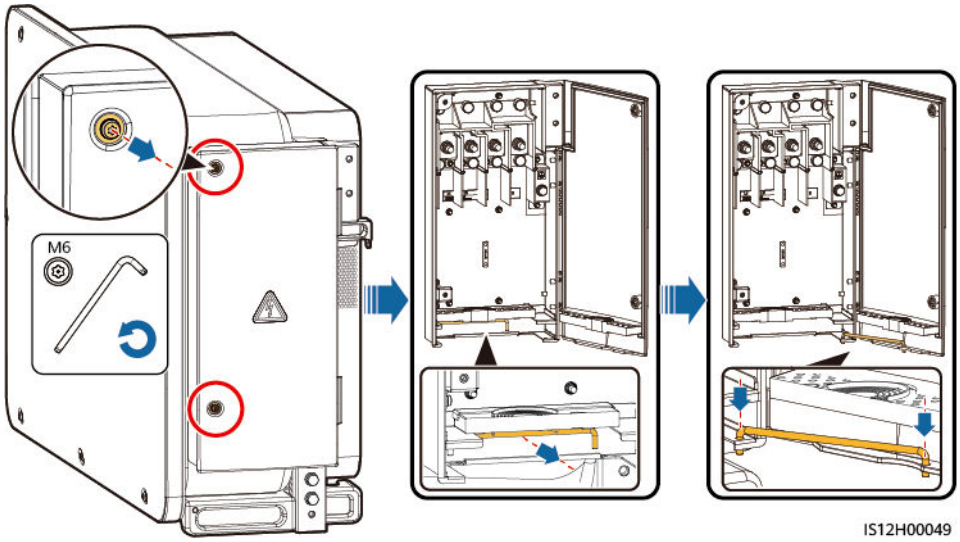

Step 2 Remove the accessories and keep them properly.

Figure 5-8 Removing the accessories

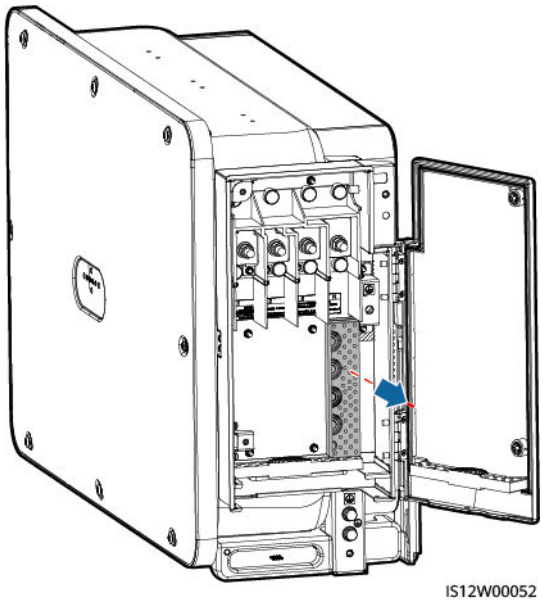

Step 3 Select a crimping module according to the type of the AC output power cable.

Figure 5-9 Select the crimping module

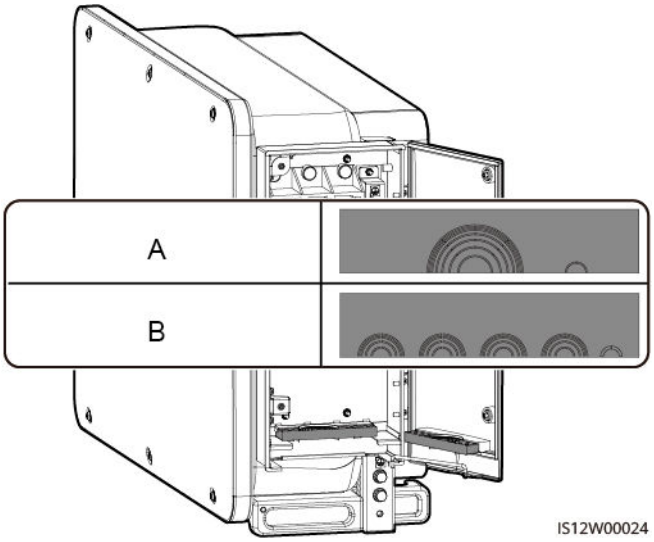

(A) Crimping module for multi-core cables (B) Crimping module for single-core cables

----End

Follow-up Procedure

Use scissors to cut off the joints of the rubber rings to remove them. All rubber rings are removed in the same way.

NOTICE

Remove the corresponding rubber rings in strict accordance with the cable diameter, and ensure that the crimping module is not damaged. Otherwise the protection level of the solar inverter will be affected.

Figure 5-10 Remove the rubber ring

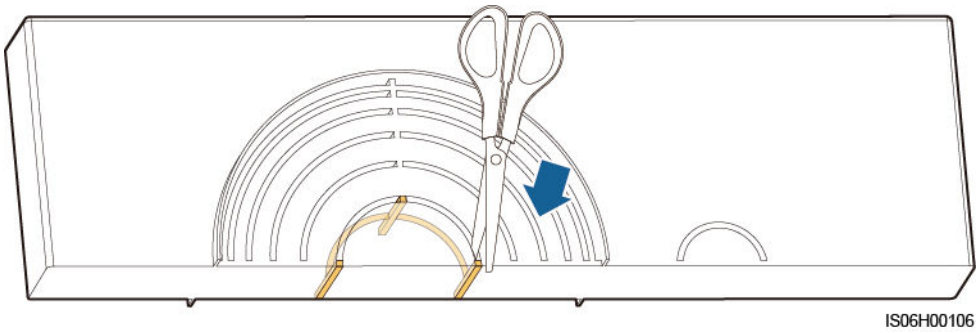

5.5 (Optional) Installing the Power Cable of the Tracking System

Precautions

WARNING

- The tracking system obtains power from the AC three-phase power grid. The rated voltage of the power supply is the rated output voltage of the solar inverter.
- Keep flammable materials away from the power cable.
- The power cable must be protected with a conduit to prevent short circuits caused by insulation layer damage.
- Connect the power cable of the tracking system before the AC output power cable. Otherwise, reworking will be caused.

Procedure

Step 1 Prepare a cable.

Step 2 Remove the corresponding rubber rings.

Step 3 Connect the power cable of the tracking system.

Figure 5-11 Connecting the power cable of the tracking system

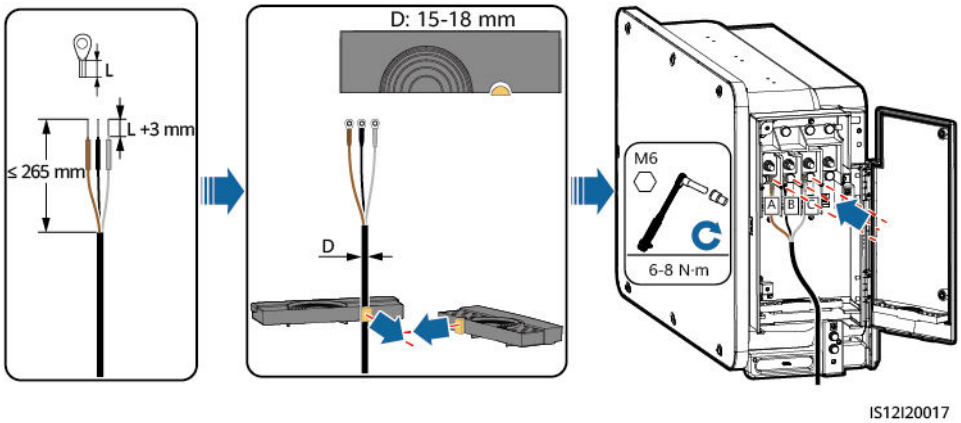

----End

5.6 Connecting an AC Output Power Cable

Prerequisites

- A three-phase AC switch should be installed on the AC side of the solar inverter. To ensure that the solar inverter can safely disconnect itself from the

power grid when an exception occurs, select a proper overcurrent protection device in compliance with local power distribution regulations.

- Connect the AC output power cable according to the requirements specified by local power grid operators.
- Connect the power cable of the tracking system before the AC output power cable. Otherwise, reworking will be caused.

Figure 5-12 Cable connection sequence

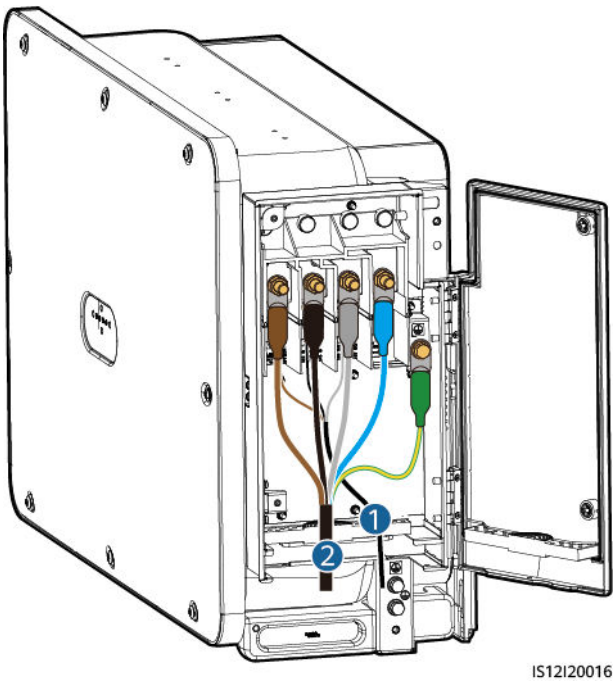

(1) Power cable of the tracking system (2) AC output power cable

WARNING

Do not connect loads between the solar inverter and the AC switch.

Requirements for the OT/DT Terminal

- If a copper cable is used, use copper wiring terminals.
- If a copper-clad aluminum cable is used, use copper wiring terminals.
- If an aluminum alloy cable is used, use copper-aluminum transition wiring terminals, or aluminum wiring terminals along with copper-aluminum transition spacers.

 Copyright © Huawei Technologies Co., Ltd.

NOTICE

- Do not connect aluminum wiring terminals to the AC terminal block. Otherwise the electrochemical corrosion will occur and affect the reliability of cable connections.
- Comply with the IEC61238-1 requirements when using copper-aluminum transition wiring terminals, or aluminum wiring terminals along with copper-aluminum transition spacers.
- If copper-aluminum transition spacers are used, pay attention to the front and rear sides. Ensure that the aluminum sides of spacers are in contact with aluminum wiring terminals, and copper sides of spacers are in contact with the AC terminal block.

Figure 5-13 Requirements for the OT/DT terminal

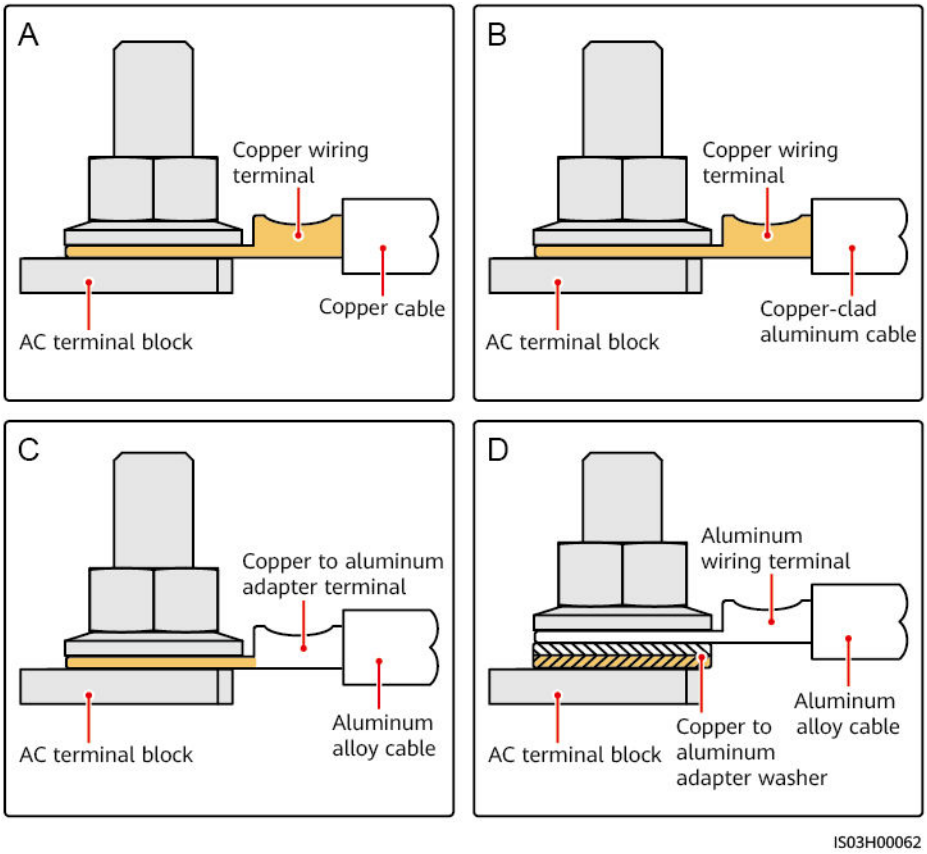

Figure 5-14 AC terminal block dimensions

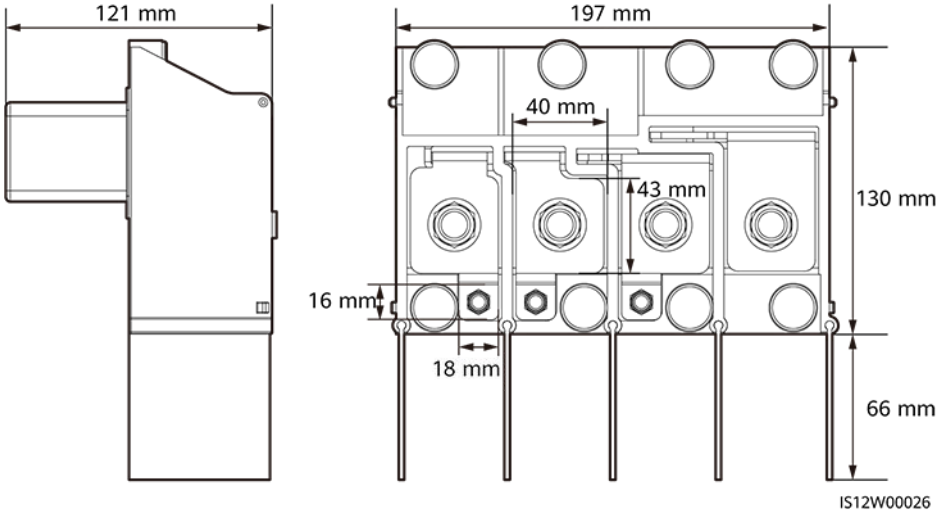

Procedure

Step 1 Prepare a cable.

Step 2 Remove rubber rings according to the cable diameter range.

Step 3 Secure the AC output power cable and PE cable.

Step 4 Install the support bar.

Step 5 Close the maintenance compartment door and tighten the two screws on the door.

NOTICE

- Sufficient slack should be provided in the PE cable to ensure that the last cable bearing the force is the PE cable when the AC output power cable bears pulling force due to force majeure.
- The cable outer diameter can be measured using the ruler sticker in the maintenance compartment.
- Ensure that the cable jacket is in the maintenance compartment.
- Ensure that the AC output power cable is secured. Failing to do so may cause the solar inverter to malfunction or damage to its terminal block by issues such as overheating.
- Before closing the maintenance compartment door, check that the cables are connected correctly and securely, and clean up the foreign matter from the maintenance compartment.
- If a screw on the maintenance compartment door is lost, obtain the spare screw from the fitting bag tied at the bottom of the maintenance compartment.

 Copyright © Huawei Technologies Co., Ltd.

Figure 5-15 Multi-core cable connections

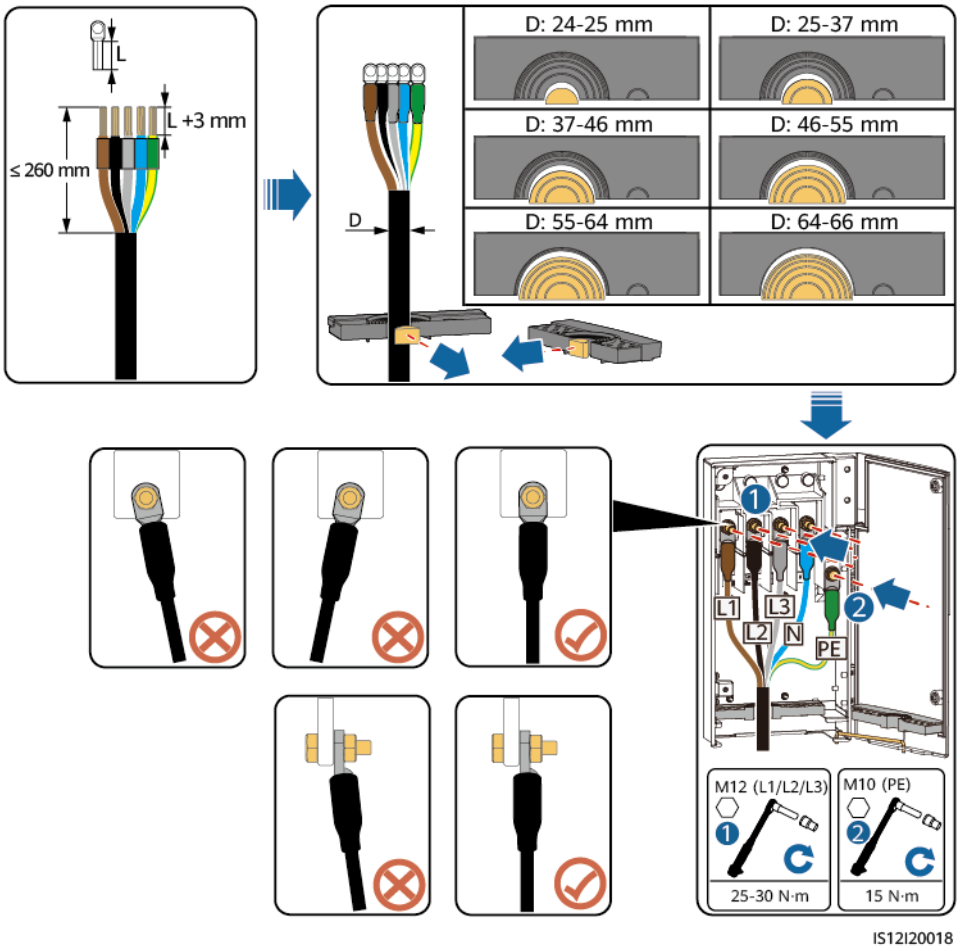

Copyright © Huawei Technologies Co., Ltd.

Figure 5-16 Single-core cable connections

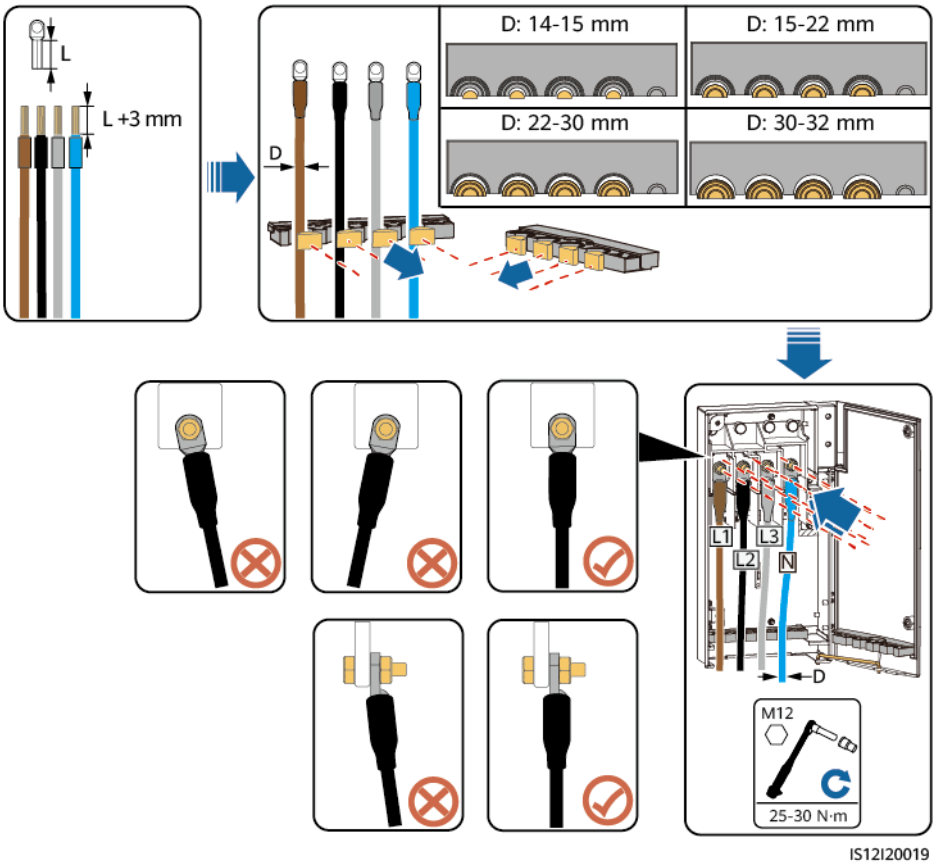

Copyright © Huawei Technologies Co., Ltd.

Figure 5-17 Cable connections

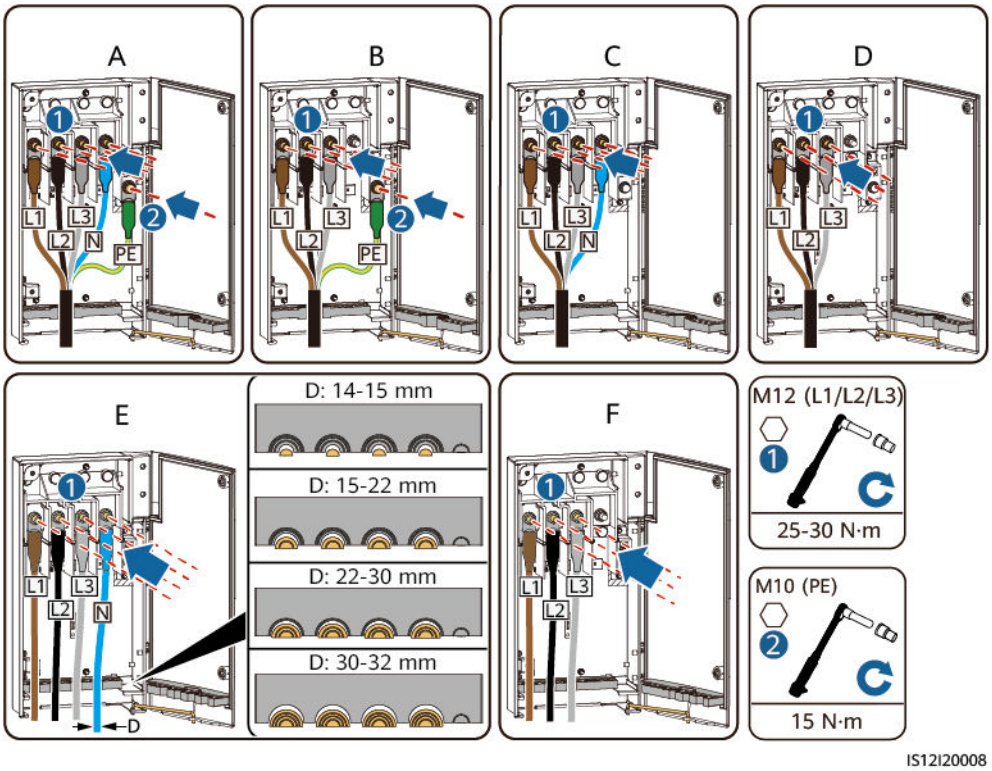

(A) Five-core cable

(B) Four-core cable (including the PE cable)

(C) Four-core cable (including the neutral wire)

(D) Three-core cable

(E) Single-core cable (including the neutral wire)

(F) Single-core cable (excluding the neutral wire)

NOTE

The cable colors shown in figures are for reference only. Select an appropriate cable according to the local standards.

Figure 5-18 Closing the Maintenance Compartment Door

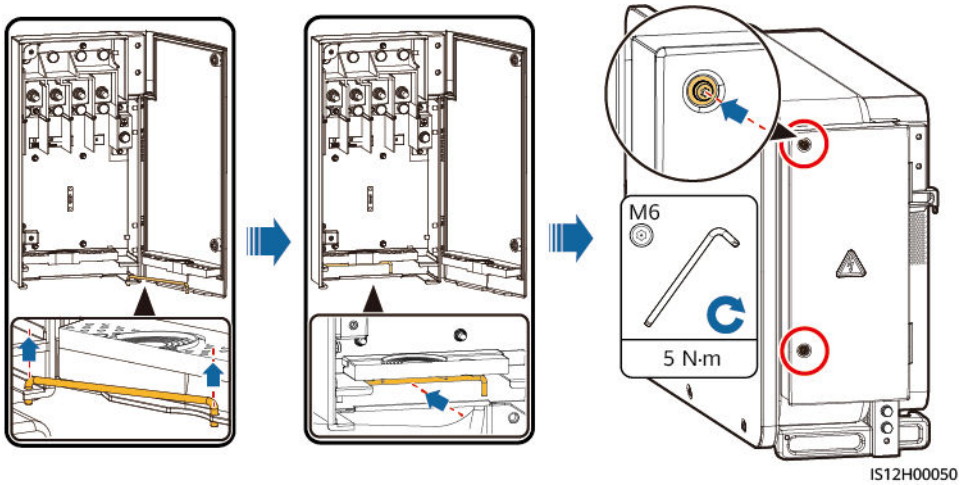

----End

5.7 Connecting DC Input Power Cables

Precautions

DANGER

- Before connecting the DC input power cables, ensure that the DC voltage is within the safe range (lower than 60 V DC) and that the three DC switches on the solar inverter are set to OFF. Failing to do so may result in electric shocks.
- If you turn a DC SWITCH to ON by mistake when connecting or disconnecting DC input power cables, do not remove or insert DC input terminals. If you need to remove or insert a DC input terminal, perform the operations provided in **8.2 Power-Off for Troubleshooting**.
- When the solar inverter operates in grid-tied mode, do not perform maintenance or operations on the DC circuit, such as connecting or disconnecting a PV string or a PV module in the PV string. Failing to do so may cause electric shocks or arcing, which may also cause fire.

WARNING

Ensure that the following conditions are met. Otherwise, the solar inverter may be damaged, or even a fire could happen.

- The open-circuit voltage of each PV string must be 1100 V DC or lower under any circumstances.
- The polarities of electric connections are correct on the DC input side. The positive and negative terminals of a PV module connect to corresponding positive and negative DC input terminals of the solar inverter.

NOTICE

- Ensure that the PV module output is well insulated to ground.
- The PV strings connecting to the same MPPT circuit should contain the same number of identical PV modules.
- The solar inverter does not support full parallel connection for PV strings (full parallel connection: PV strings connect to one another in parallel outside the solar inverter and then connect to the solar inverter separately).
- During the installation of PV strings and the solar inverter, the positive or negative terminals of PV strings may be short-circuited to ground if the power cable is not properly installed or routed. In this case, an AC or DC short circuit may occur and damage the solar inverter. The caused device damage is not covered under any warranty.

 Copyright © Huawei Technologies Co., Ltd.

Terminal Description

The solar inverter has 20 DC input terminals. DC SWITCH 1 controls PV1–PV8 (MPPT1–MPPT4), DC SWITCH 2 controls PV9–PV14 (MPPT5–MPPT7), and DC SWITCH 3 controls PV15–PV20 (MPPT8–MPPT10).

Figure 5-19 DC terminals

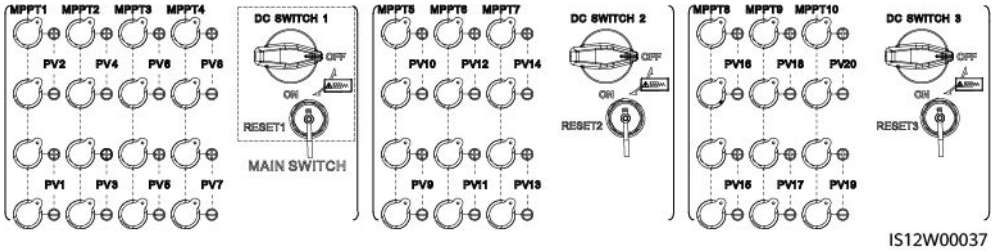

When the DC input is not fully configured, the DC input terminals must meet the following requirements:

1. Evenly distribute the DC input power cables on the DC input terminals controlled by the three DC switches. DC SWITCH 1 is preferred.
2. The even-numbered PV terminals are preferred to maximize the connections of MPPTs.
3. If the number of PV inputs is 11 to 19, connect cables to the odd-numbered PV terminals from PV1 and PV19, and avoid connections to adjacent MPPTs if possible.

If the number of PV inputs is 11 to 19, the DC input terminals are selected as follows.

Figure 5-20 DC input terminal connections

Number of PV Inputs	SWITCH 1				SWITCH 2			SWITCH 3		
	MPPT1	MPPT2	MPPT3	MPPT4	MPPT5	MPPT6	MPPT7	MPPT8	MPPT9	MPPT10
11	PV2	PV4	PV6	PV8	PV10	PV12	PV14	PV16	PV18	PV20
	PV1									
12	PV2	PV4	PV6	PV8	PV10	PV12	PV14	PV16	PV18	PV20
	PV1									PV19
13	PV2	PV4	PV6	PV8	PV10	PV12	PV14	PV16	PV18	PV20
	PV1		PV5							PV19
14	PV2	PV4	PV6	PV8	PV10	PV12	PV14	PV16	PV18	PV20
	PV1		PV5					PV15		PV19
15	PV2	PV4	PV6	PV8	PV10	PV12	PV14	PV16	PV18	PV20
	PV1		PV5		PV9			PV15		PV19
16	PV2	PV4	PV6	PV8	PV10	PV12	PV14	PV16	PV18	PV20
	PV1		PV5		PV9		PV13		PV17	PV19
17	PV2	PV4	PV6	PV8	PV10	PV12	PV14	PV16	PV18	PV20
	PV1	PV3		PV7	PV9		PV13		PV17	PV19
18	PV2	PV4	PV6	PV8	PV10	PV12	PV14	PV16	PV18	PV20
	PV1	PV3	PV5		PV9	PV11		PV15	PV17	PV19
19	PV2	PV4	PV6	PV8	PV10	PV12	PV14	PV16	PV18	PV20
	PV1	PV3	PV5	PV7	PV9		PV13	PV15	PV17	PV19

IS12P00012

 Copyright © Huawei Technologies Co., Ltd.

Specification Requirements

Cables with high rigidity, such as armored cables, are not recommended, because poor contact may be caused by the bending of cables.

CAUTION

Use the Amphenol Helios H4 connectors delivered with the solar inverter. If the PV connectors are lost or damaged, purchase the connectors of the same model. The device damage caused by incompatible PV connectors is beyond the warranty scope.

Procedure

Step 1 Prepare the DC input power cables.

Step 2 Crimp positive and negative metal contacts.

Step 3 Insert the contacts into the corresponding positive and negative connectors.

Step 4 Tighten the lock nuts on the positive and negative connectors.

Step 5 Use a multimeter to measure the voltage between the positive and negative terminals of the PV string (measurement range no less than 1100 V).

- If the voltage is a negative value, the DC input polarity is incorrect and needs correction.
- If the voltage is greater than 1100 V, too many PV modules configured to the same string. Remove some PV modules.

Step 6 Insert the positive and negative connectors into the corresponding DC positive and negative input terminals of the solar inverter.

Figure 5-21 Connecting DC input power cables

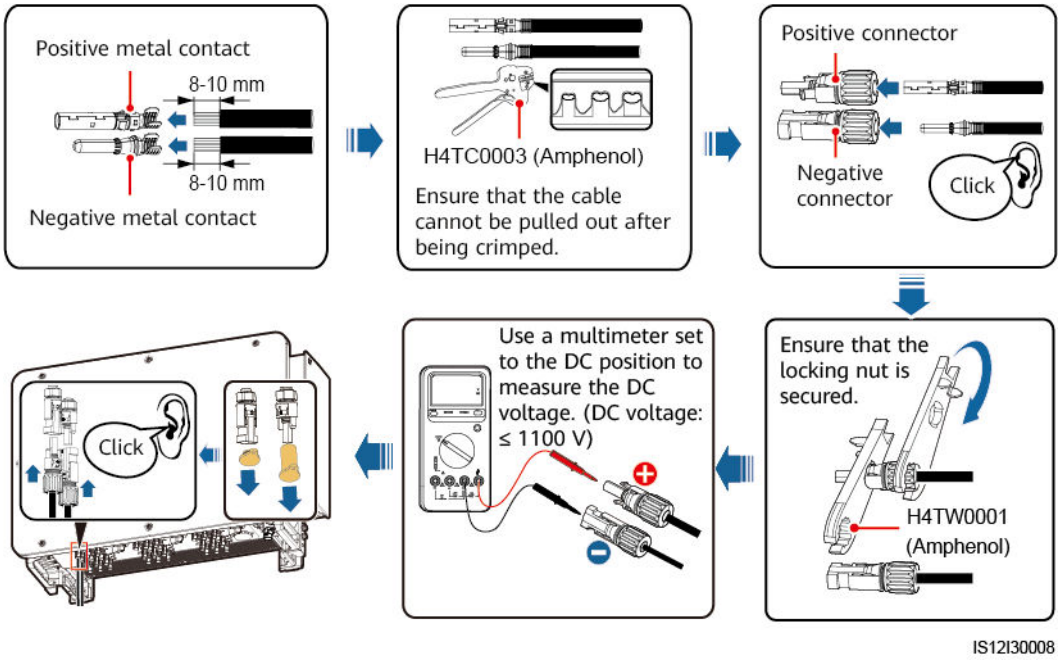

Copyright © Huawei Technologies Co., Ltd.

Figure 5-22 Connector connection

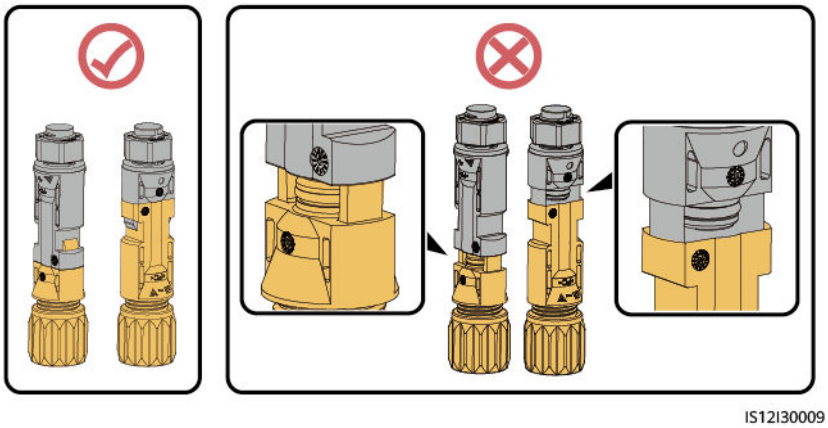

NOTICE

- If the DC input power cables are reversely connected and DC switches are set to ON, do not immediately turn off the DC switches or reconnect the positive and negative connectors. Otherwise, the device may be damaged. The caused device damage is not covered under any warranty. Wait until the solar irradiance declines at night and the PV string current reduces to below 0.5 A. Then, turn off the three DC switches, remove the positive and negative connectors, and rectify the connection of the DC input power cables.
- Connect the PV string connector to the inverter connector, and then pull back the PV string connector along the axial direction to check whether the connectors are securely connected.
- The connector must be securely connected. Damages caused by improper connection are not covered under the warranty.

Figure 5-23 DC input power cabling requirement

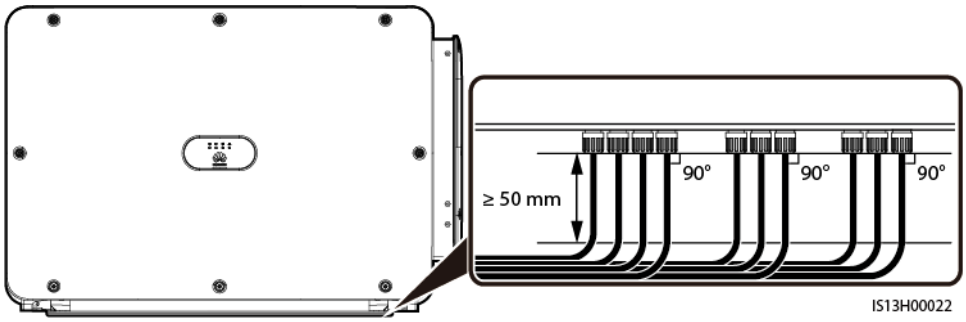

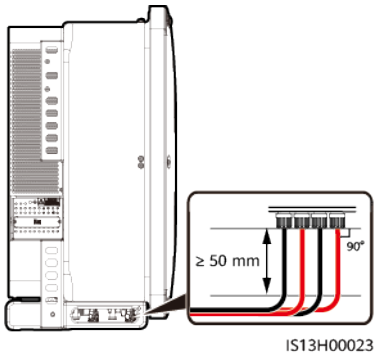

NOTICE

During DC input power cabling, leave at least 50 mm of slack. The axial tension on PV connectors must not exceed 80 N. Radial stress or torque must not be generated on PV connectors.

----End

5.8 Connecting the RS485 Communications Cables

Pin Definitions of the Communications Port

Figure 5-24 Communications port

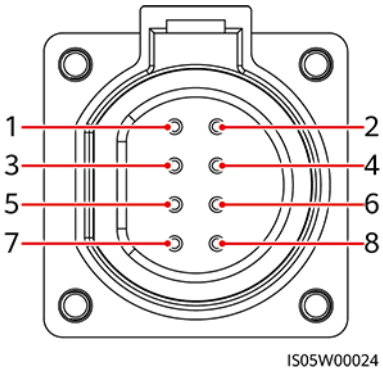

Port	Pin	Definition	Pin	Definition	Description
RS485-1	1	RS485A IN, RS485 differential signal+	2	RS485A OUT, RS485 differential signal+	Used for cascading solar inverters or connecting to devices such as the SmartLogger.
	3	RS485B IN, RS485 differential signal–	4	RS485B OUT, RS485 differential signal–	
Protection ground	5	PE, shielding ground	6	PE, shielding ground	-

Port	Pin	Definition	Pin	Definition	Description
RS485-2	7	RS485A, RS485 differential signal+	8	RS485B, RS485 differential signal–	Used for connecting to an RS485 slave device. ● In the scenario of SDongle networking or a single solar inverter, the RS485-2 port is connected to a power meter to collect information about power at the grid-tied point for grid-tied point power control. ● In the scenario of intelligent support tracking control, the RS485-2 port is connected to the support tracking system to collect support information.

Connecting the RS485 Communications Cables

When routing the communications cable, separate it from power cables to prevent communication from being affected. Connect the shield layer to the PE point. This section describes how to connect three communications cables.

 Copyright © Huawei Technologies Co., Ltd.

Figure 5-25 Connecting RS485 communications cables (4–8 mm four-hole rubber plug)

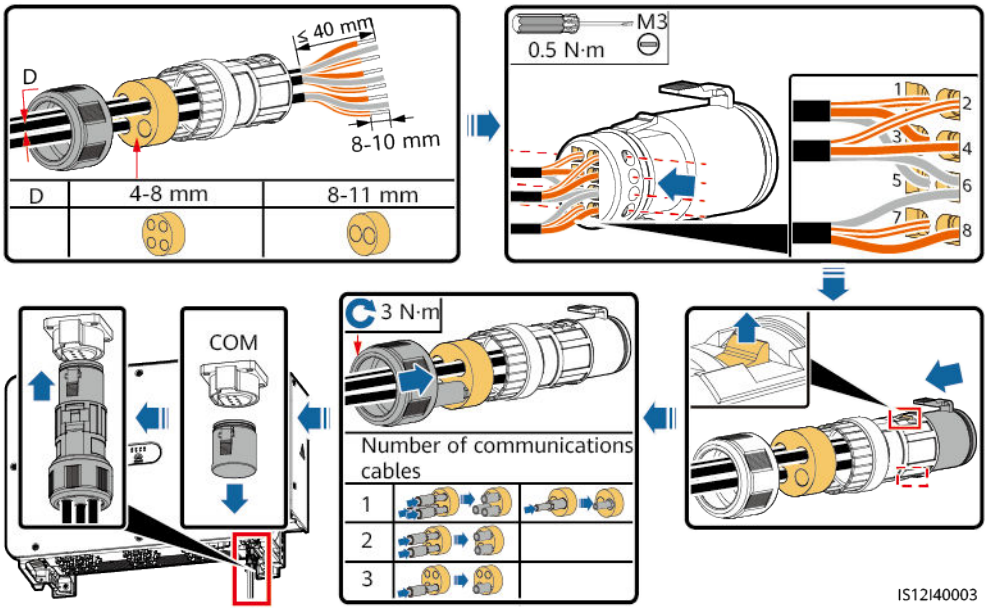

Figure 5-26 Connecting RS485 communications cables (4–8 mm two-hole or three-hole rubber plug)

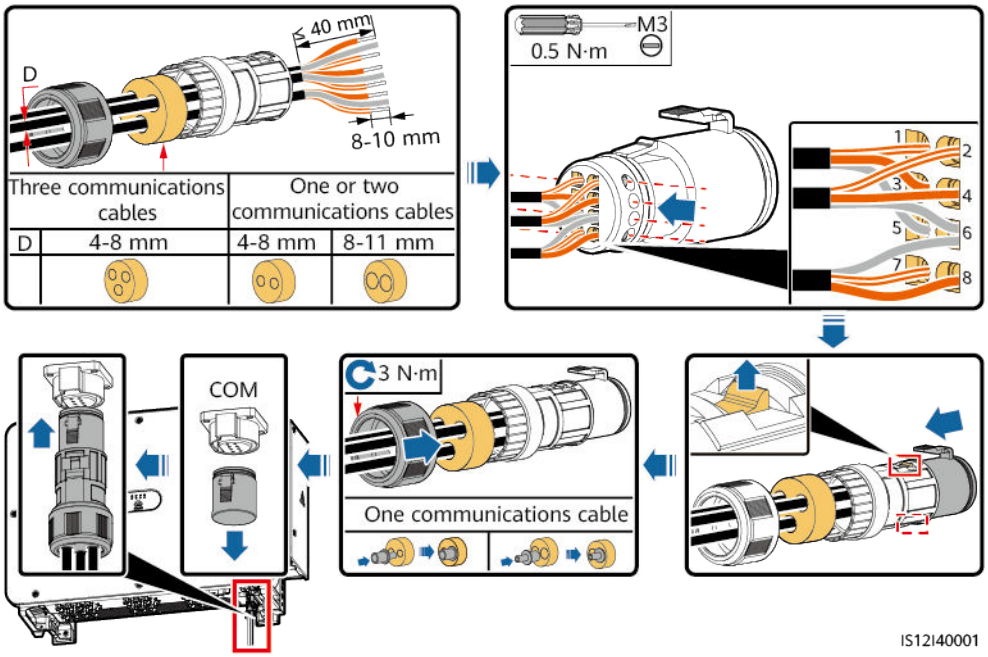

6 Commissioning

6.1 Check Before Power-on

No.	Acceptance Criteria
1	The solar inverter is installed correctly and securely.
2	The DC switches and the downstream AC switch are OFF.
3	All cables are connected correctly and securely.
4	The installation space is proper, and the installation environment is clean and tidy.
5	The maintenance compartment door is closed and the screws are secured.
6	Unused DC input terminals are sealed.
7	Unused USB and RESET ports are plugged with watertight caps.

6.2 Powering On the SUN2000

Precautions

WARNING

When LED2 is steady green (meaning that the inverter is grid-tied), do not turn on any DC switch. Otherwise, the inverter may be damaged because the insulation resistance is not detected.

 Copyright © Huawei Technologies Co., Ltd.

NOTICE

- Before turning on the AC switch between the SUN2000 and the power grid, use a multimeter set to the AC position to check that the AC voltage is within the specified range.
- Do not turn the DC switch to the unloaded position.
- When the system is powered on or running, do not place obstacles (such as cables) to block the rotation of the handle or manually hold the handle. Otherwise, the DC switch cannot be automatically disconnected.
- If the solar inverter has been stored for more than two years, it must be checked and tested by professionals before being put into use.

Procedure

Step 1 Turn on the AC switch between the SUN2000 and the power grid.

NOTICE

If you perform **Step 2** before **Step 1**, the SUN2000 reports a fault about abnormal shutdown. You can start the SUN2000 only after the fault is automatically rectified.

Step 2 Set DC SWITCH 1 (MAIN SWITCH) at the bottom of the solar inverter chassis to ON. When you hear a click, the switch is ON.

Step 3 Check the status of the PV connection indicator. If it is steady green, set DC SWITCH 2 and DC SWITCH 3 to ON.

Step 4 Observe the LED indicators to check the SUN2000 operating status.

Step 5 Perform quick settings on the SUN2000 app. For details, see **7.1 Operations with the SUN2000 App**.

----End

 Copyright © Huawei Technologies Co., Ltd.

7 Man-Machine Interactions

7.1 Operations with the SUN2000 App

7.1.1 App Introduction

Functions

- The FusionSolar app is recommended when the SUN2000 is connected to the FusionSolar hosting cloud. The SUN2000 app is recommended when the SUN2000 is connected to other management systems.
- The SUN2000 or FusionSolar app (app for short) is a mobile phone app that communicates with the SUN2000 over a WLAN/Bluetooth module or a USB data cable to allow for querying alarms, setting parameters, and performing routine maintenance as an easy-to-use maintenance platform.

Connection Mode

After the DC or AC side of the SUN2000 is powered on, you can connect the app to it through a WLAN module, a Bluetooth module or a USB data cable.

NOTICE

- Over a WLAN module: The USB-Adapter2000-C WLAN module is supported.
- Over a Bluetooth module: The USB-Adapter2000-B Bluetooth module is supported.
- Over a USB data cable: The USB 2.0 port is supported. Use the USB data cable delivered with the mobile phone.
- Mobile phone operating system: Android 4.0 or later.
- Recommended phone brands: Huawei and Samsung.

 Copyright © Huawei Technologies Co., Ltd.

Figure 7-1 Connection over a WLAN module or a Bluetooth module

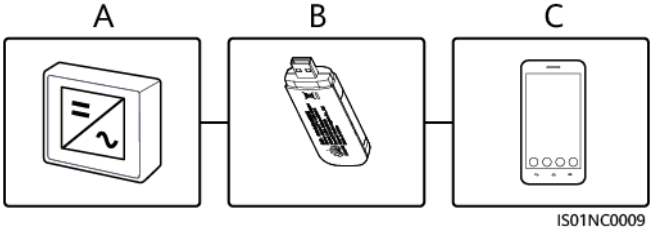

(A) SUN2000 (B) WLAN module or Bluetooth module (C) Mobile phone

Figure 7-2 Connection over a USB data cable

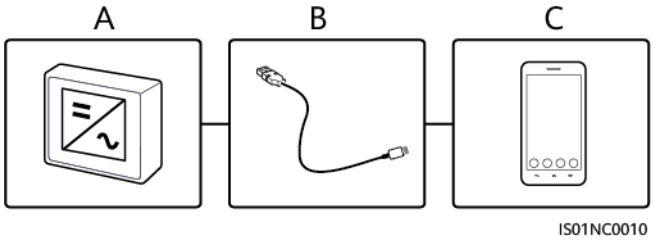

(A) SUN2000 (B) USB data cable (C) Mobile phone

Disclaimer

NOTICE

- The configurable parameters of the SUN2000 vary with the device model and grid code.
- If you change the grid code, some parameters may be restored to factory defaults. After the grid code is changed, check whether the previously set parameters are affected.
- Delivering a reset, factory reset, shutdown, or upgrade command to the solar inverters may cause power grid connection failure, which affects the energy yield.
- Only professionals are allowed to set the grid parameters, protection parameters, feature parameters, and power adjustment parameters of the solar inverters. If the grid parameters, protection parameters, and feature parameters are incorrectly set, the solar inverters may not connect to the power grid. If the power adjustment parameters are incorrectly set, the solar inverters may not connect to the power grid as required. In these cases, the energy yield will be affected.
- The parameter names, value ranges, and default values are subject to change.

7.1.2 Downloading and Installing the App

- FusionSolar app: Scan the QR code and download the latest installation package.

- SUN2000 app: Log in to Huawei AppGallery (https://appstore.huawei.com), search for **SUN2000**, and download the app installation package. You can also scan the QR code (https://appgallery.cloud.huawei.com/appdl/C10279542) to download the installation package.

QR code:

FusionSolar SUN2000

7.1.3 Logging In to the App

Prerequisites

- The DC or AC side of the SUN2000 has been energized.
- Connection over a WLAN module or a Bluetooth module:
  a. The WLAN module or Bluetooth module is connected to the **USB** port at the bottom of the SUN2000.
  b. The WLAN or Bluetooth function is enabled.
  c. Keep the mobile phone within 5 m from the SUN2000. Otherwise, the communication between them would be affected.
- Connection over a USB cable:
  a. The USB data cable is connected from the USB port at the bottom of the SUN2000 to the port on the mobile phone.
  b. If the USB data cable is successfully connected, the message **Connected to USB Accessory** will pop up on the phone. Otherwise, the cable is not connected.

Procedure

1. Run the app and select a connection mode.

 Copyright © Huawei Technologies Co., Ltd.

NOTE

- The screenshots in this document correspond to the SUN2000 app 6.22.10.117 (Android) and FusionSolar app 6.22.10.117 (Android). The screenshots are for reference only. The actual screens may vary.
- When the WLAN connection is used, scan the QR code of the WLAN module to access the login screen.
- When the WLAN connection is used, the initial name of the WLAN hotspot is **Adapter-WLAN module SN**, and the initial password is **Changeme**. Use the initial password upon first power-on and change it immediately after login. To ensure account security, change the password periodically and keep the new password in mind. Not changing the initial password may cause password disclosure. A password left unchanged for a long period of time may be stolen or cracked. If a password is lost, devices cannot be accessed. In these cases, the user is liable for any loss caused to the PV plant.
- When the Bluetooth connection is used, the connected Bluetooth device is named after **last 8 digits of the SN barcode+HWAPP**.
- After you select **Use by default for this USB accessory**, a message that asks you to confirm the USB access will not appear if you log in to the app again without removing the USB data cable.

a. (Scenario in which the SUN2000 is connected to the FusionSolar hosting cloud) Run the FusionSolar app and access the **Device Commissioning** screen.

 Copyright © Huawei Technologies Co., Ltd.

Figure 7-3 Selecting a connection mode (with network access)

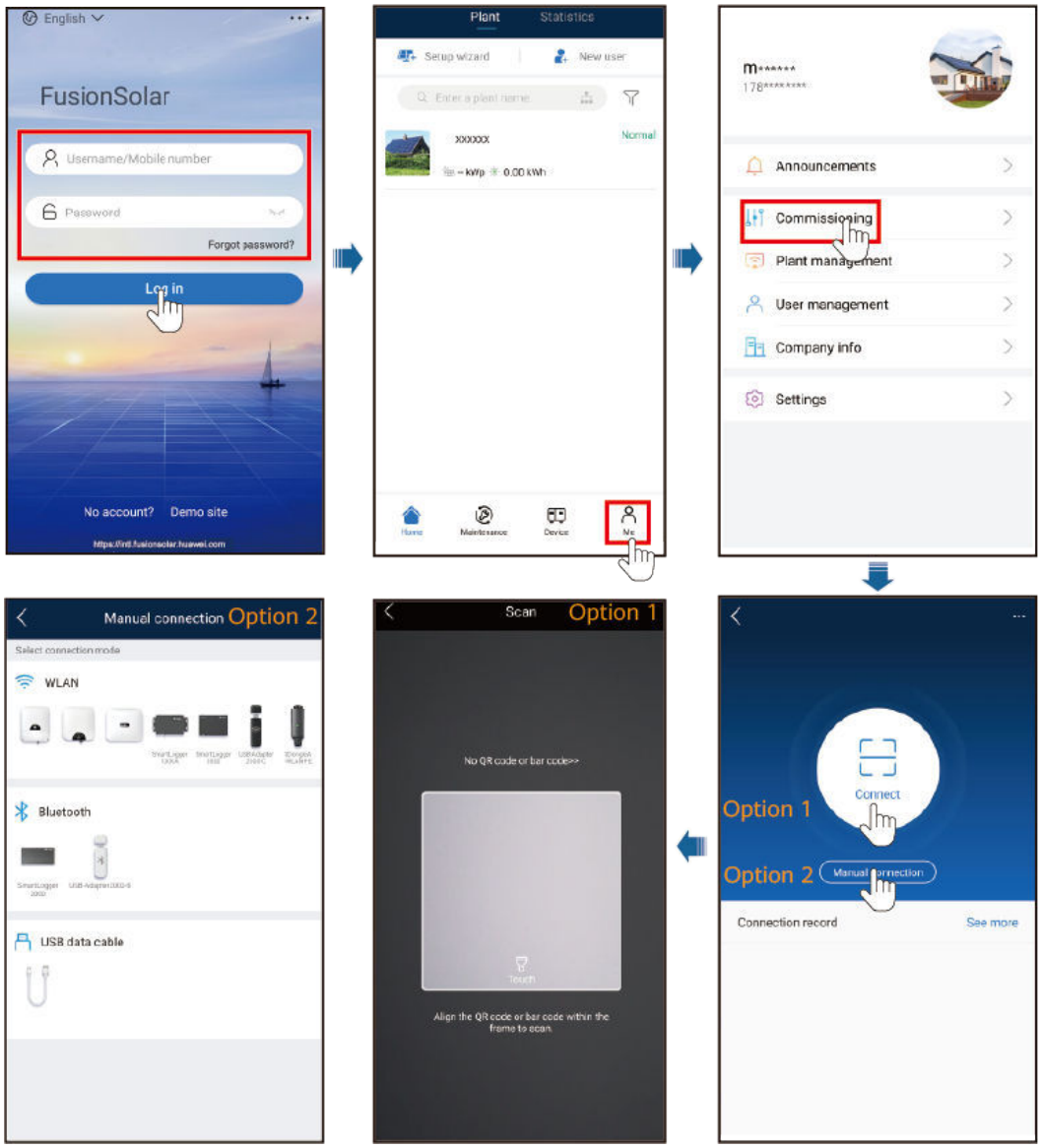

Figure 7-4 Selecting a connection mode (without network access)

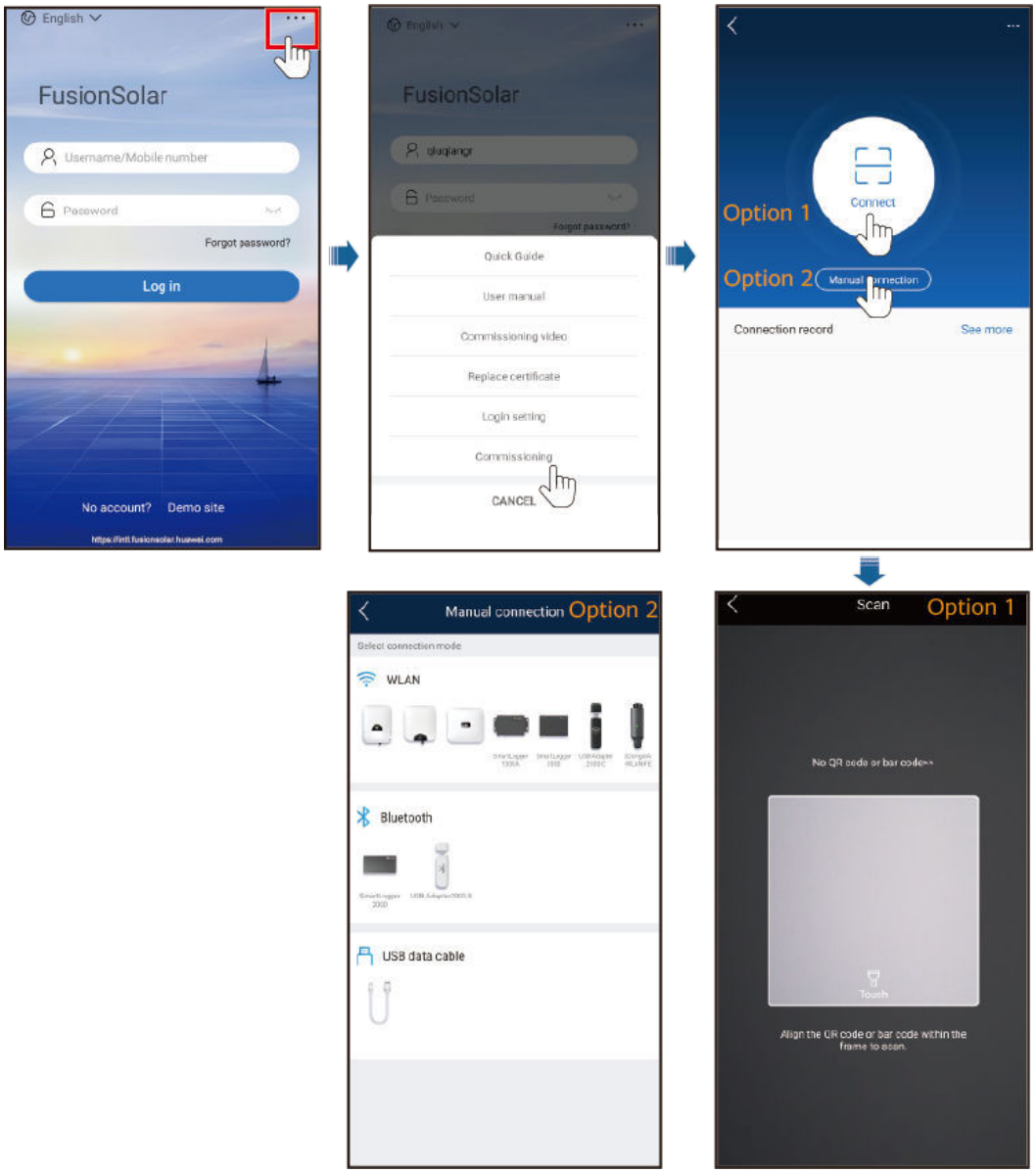

b. (Scenario in which the SUN2000 is connected to other management systems) Run the SUN2000 app and access the operation screen.

Figure 7-5 Selecting a connection method

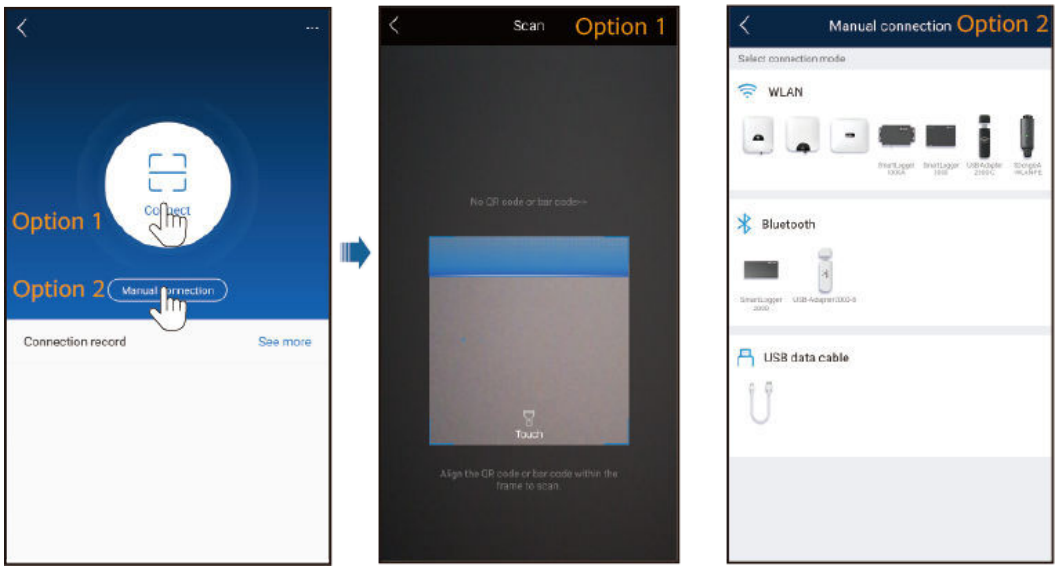

2. Enter the login password, tap **Log in** to access the quick settings screen or the main menu screen.

NOTICE

- When you log in to the system for the first time, set the login password. To ensure account security, protect the password by changing it periodically, and keep it secure. Your password might be stolen or cracked if it is left unchanged for extended periods. If a password is lost, devices cannot be accessed. In these cases, the Company shall not be liable for any loss caused to the plant.
- You will be locked out for 10 minutes after five consecutive failed password attempts (the interval between two consecutive entries is less than 2 minutes).
- If you log in to the app after the device connects to the app for the first time or factory defaults are restored, the quick settings screen will be displayed. Set basic parameters as prompted. If you do not set basic parameters for the inverter on the quick settings screen, the screen is still displayed when you log in to the app next time.
- If the device has been connected to the SmartLogger, the quick settings screen is not automatically displayed when the device is connected to the app.
- Set the correct grid code based on the application area and scenario of the solar inverter.

 Copyright © Huawei Technologies Co., Ltd.

Figure 7-6 Login

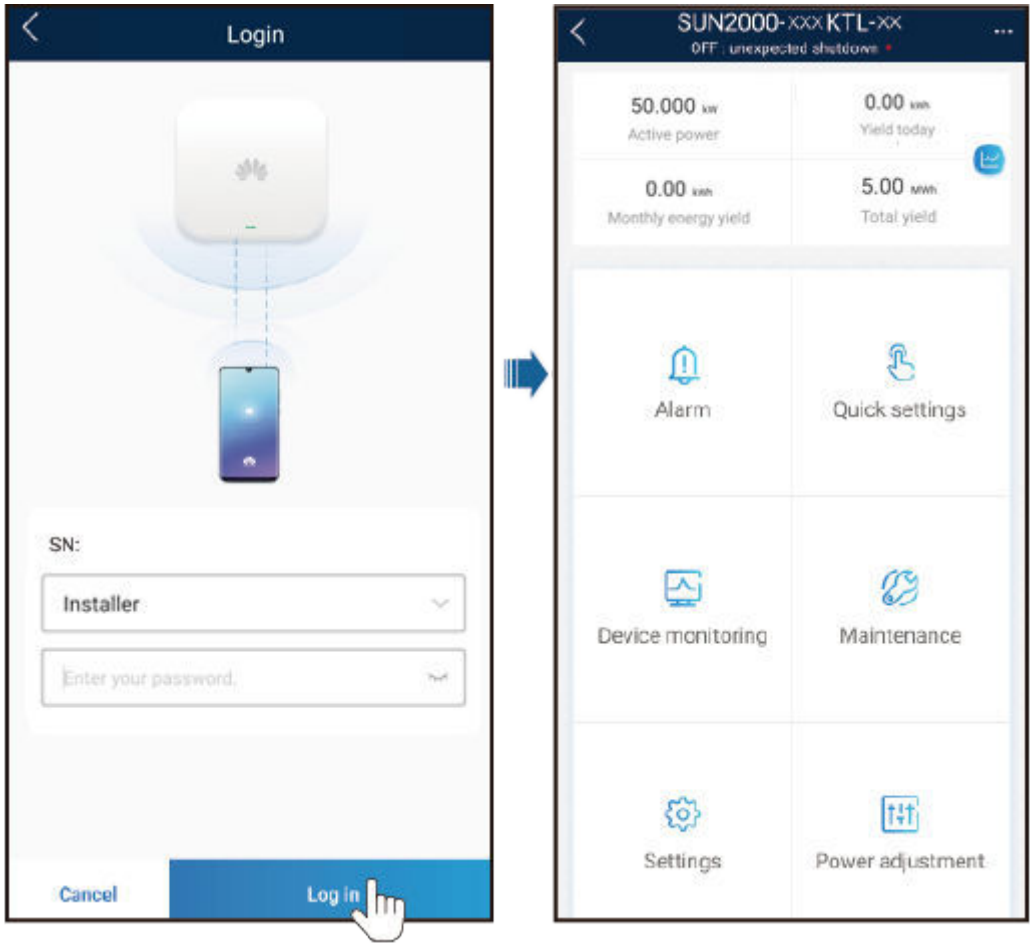

7.1.4 Setting Parameters

7.1.4.1 Setting Grid Parameters

Choose **Settings** > **Grid parameters** to set grid parameters.

No.	Parameter	Description
1	Grid Code	Set this parameter based on the grid code of the country or region where the inverter is used and the inverter application scenario.
2	Isolation	Set the working mode of the inverter based on the grounding status at DC side and the connection to the power grid.
3	Output mode	Specifies whether the inverter output has a neutral wire based on the application scenario.
4	Auto start upon grid recovery	Specifies whether to allow the inverter to automatically start after the power grid recovers.
5	Grid connection delay after grid recovery (s)	Specifies the time after which the inverter begins restarting after the power grid recovers.

No.	Parameter	Description
6	Grid reconnection voltage upper limit (V)	The standards of certain countries and regions require that after the inverter shuts down for protection due to a fault, if the power grid voltage is higher than **Grid reconnection voltage upper limit**, the inverter is not allowed to reconnect to the grid.
7	Grid reconnection voltage lower limit (V)	The standards of certain countries and regions require that after the inverter shuts down for protection due to a fault, if the power grid voltage is lower than **Grid reconnection voltage lower limit**, the inverter is not allowed to reconnect to the grid.
8	Grid reconnection frequency upper limit (Hz)	The standards of certain countries and regions require that after the inverter shuts down for protection due to a fault, if the power grid frequency is higher than **Grid reconnection frequency upper limit**, the inverter is not allowed to reconnect to the grid.
9	Grid reconnection frequency lower limit (Hz)	The standards of certain countries and regions require that after the inverter shuts down for protection due to a fault, if the power grid frequency is lower than **Grid reconnection frequency lower limit**, the inverter is not allowed to reconnect to the grid.

7.1.4.2 Setting Protection Parameters

Choose **Settings** > **Protection parameters** to set protection parameters.

 Copyright © Huawei Technologies Co., Ltd.

No.	Parameter	Description
1	Unbalance voltage protection threshold (%)	Specifies the inverter protection threshold when the power grid voltage is unbalanced.
2	Insulation resistance protection threshold (MΩ)	To ensure device safety, the inverter detects the insulation resistance of the input side with respect to ground when it starts a self-check. If the detected value is less than the preset value, the inverter does not connect to the grid.
4	Phase angle offset protection	The standards of certain countries and regions require that the inverter needs to be protected when the phase angle offset of the power grid three phases exceeds a certain value.
5	Voltage threshold for 10-minute overvoltage protection (V)	Specifies the 10-minute overvoltage protection threshold.
6	Duration threshold for 10-minute overvoltage protection (ms)	Specifies the 10-minute overvoltage protection duration.
7	Level-1 overvoltage protection threshold (V)	Specifies the level-1 grid overvoltage protection threshold.
8	Duration threshold for level-1 overvoltage protection (ms)	Specifies the level-1 grid overvoltage protection duration.
9	Level-1 undervoltage protection threshold (V)	Specifies the level-1 grid undervoltage protection threshold.
10	Duration threshold for level-1 undervoltage protection (ms)	Specifies the level-1 grid undervoltage protection duration.
11	Level-2 undervoltage protection threshold (V)	Specifies the level-2 grid undervoltage protection threshold.
12	Duration threshold for level-2 undervoltage protection (ms)	Specifies the level-2 grid undervoltage protection duration.
13	Level-1 overfrequency protection threshold (Hz)	Specifies the level-1 grid overfrequency protection threshold.
14	Duration threshold for level-1 overfrequency protection (ms)	Specifies the level-1 grid overfrequency protection duration.
15	Level-1 underfrequency protection threshold (Hz)	Specifies the level-1 grid underfrequency protection threshold.
16	Duration threshold for level-1 underfrequency protection (ms)	Specifies the level-1 grid underfrequency protection duration.
17	Active islanding protection	Specifies whether to enable the active islanding protection function.

7.1.4.3 Setting Feature Parameters

Choose **Settings** > **Feature parameters** to set feature parameters.

No.	Parameter	Description	Remarks
1	MPPT multi-peak scanning	When the inverter is used in scenarios where PV strings are greatly shaded, set this parameter to **Enable**, and then the inverter will perform MPPT scanning at regular intervals to locate the maximum power.	-
2	MPPT multi-peak scan interval (min)	Specifies the MPPT scanning interval.	This parameter is displayed when **MPPT multi-peak scanning** is set to **Enable**.
3	LVRT	LVRT is short for low voltage ride-through. When the grid voltage is abnormally low for a short time, the inverter cannot disconnect from the power grid immediately and has to work for some time.	-
4	LVRT triggering threshold (V)	Specifies the threshold for triggering LVRT. The threshold settings should meet the local grid standard.	This parameter is displayed when **LVRT** is set to **Enable**.
5	LVRT gradient K1	During LVRT, the solar inverter needs to generate positive-sequence reactive power to support the power grid. This parameter is used to set the positive-sequence reactive power generated by the solar inverter. For example, if you set **LVRT gradient K1** to **2**, the increment of positive-sequence reactive current generated by the solar inverter is 20% of the rated current when the AC voltage decreases by 10% during LVRT.	

 Copyright © Huawei Technologies Co., Ltd.

No.	Parameter	Description	Remarks
6	LVRT gradient K2	During LVRT, the solar inverter needs to generate negative-sequence reactive power to support the power grid. This parameter is used to set the negative-sequence reactive power generated by the solar inverter. For example, if you set **LVRT gradient K2** to **2**, the increment of negative-sequence reactive current generated by the solar inverter is 20% of the rated current when the AC voltage decreases by 10% during LVRT.	
7	Percentage of LVRT reactive current limiting	During LVRT, the solar inverter needs to limit the reactive current. For example, if you set **Percentage of LVRT reactive current limiting** to **50**, the reactive current upper limit of the solar inverter is 50% of the rated current during LVRT.	
8	Threshold of LVRT zero-current mode	When **Zero current due to power grid fault** is enabled, if the power grid voltage is less than the value of **Threshold of LVRT zero-current mode** during LVRT, the zero current mode is used. Otherwise, the mode configured in **LVRT mode** is used.	
9	LVRT mode	Sets LVRT mode. The options are **Zero-current mode**, **Constant current mode**, **Reactive power priority mode**, and **Active power priority mode**.	
10	LVRT characteristic curve	Specifies the low voltage ride-through capability of the device.	

 Copyright © Huawei Technologies Co., Ltd.

No.	Parameter	Description	Remarks
11	RCD enhancement	RCD refers to the residual current of the inverter to the ground. To ensure device and personal safety, RCD should be limited to the specified value in the standard. If an AC switch with a residual current detection function is installed outside the inverter, this function should be enabled to reduce the residual current generated when the inverter is running, thereby preventing the AC switch from misoperations.	-
12	PID protection at night	When the inverter outputs reactive power at night and this parameter is set to **Enable**, the inverter will shut down automatically if it detects abnormal status of the PID compensation.	-
13	HVRT	HVRT is short for high voltage ride-through. When the grid voltage is abnormally high for a short time, the inverter cannot disconnect from the power grid immediately and has to work for some time.	-
14	HVRT triggering threshold (V)	Specifies the threshold for triggering HVRT. The threshold settings should meet the local grid standard.	This parameter is displayed when **HVRT** is set to **Enable**.
15	HVRT gradient K1	During HVRT, the solar inverter needs to generate positive-sequence reactive power to support the power grid. This parameter is used to set the positive-sequence reactive power generated by the solar inverter. For example, if you set **HVRT gradient K1** to **2**, the increment of positive-sequence reactive current generated by the solar inverter is 20% of the rated current when the AC voltage increases by 10% during HVRT.	

 Copyright © Huawei Technologies Co., Ltd.

No.	Parameter	Description	Remarks
16	HVRT gradient K2	During HVRT, the solar inverter needs to generate negative-sequence reactive power to support the power grid. This parameter is used to set the negative-sequence reactive power generated by the solar inverter. For example, if you set **HVRT gradient K2** to **2**, the increment of negative-sequence reactive current generated by the solar inverter is 20% of the rated current when the AC voltage increases by 10% during HVRT.	
17	Grid voltage protection shield during VRT	Specifies whether to shield the undervoltage protection function during LVRT or HVRT.	This parameter is displayed when **LVRT** or **HVRT** is set to **Enable**.
18	VRT exit hysteresis threshold	Specifies the LVRT/HVRT recovery threshold.	• This parameter is displayed when **LVRT** or **HVRT** is set to **Enable**. • LVRT recovery threshold = Threshold for triggering LVRT + VRT exit hysteresis threshold • HVRT recovery threshold = Threshold for triggering HVRT - VRT exit hysteresis threshold
19	Zero current due to power grid fault	Certain countries and regions have requirements on the output current during high/low voltage ride-through. In this case, set this parameter to **Enable**. After this parameter is set to **Enable**, the output current is less than 10% of the rated current during high/low voltage ride-through.	This parameter is displayed when **LVRT** or **HVRT** is set to **Enable**.
20	Power quality optimization mode	If this parameter is set to **Enable**, the inverter output current harmonics will be optimized.	-

 Copyright © Huawei Technologies Co., Ltd.

No.	Parameter	Description	Remarks
21	PV module type	This parameter is used to set different types of PV modules and the shutdown time of the concentration PV module. If the concentration PV modules are shaded, the power drops drastically to 0 and the inverter shuts down. The energy yield would be affected since it takes too long for the power to resume and inverter to restart. The parameter does not need to be set for crystalline silicon and filmy PV modules.	● If this parameter is set to **Crystalline silicon** or **Film**, the inverter automatically detects the power of PV modules when they are shaded and shuts down if the power is too low. ● When concentration PV modules are used: – If this parameter is set to **CPV 1**, the inverter can quickly restart in 60 minutes if the input power of PV modules drops drastically due to shading. – If this parameter is set to **CPV 2**, the inverter can quickly restart in 10 minutes if the input power of PV modules drops drastically due to shading.
22	PID compensation direction	When the external PID module compensates the PID voltage for the PV system, set **Built-in PID compensation direction** to the actual compensation direction of the PID module so that the inverter can output reactive power at night.	-
23	String connection mode	Specifies the connection mode of PV strings.	● When PV strings connect to the inverter separately (All PV strings separated), there is no need to set this parameter. The inverter can automatically detect the connection mode of the PV strings. ● When PV strings connect to one another in parallel outside the inverter and then connect to it independently (All PV strings connected), set this parameter to **All PV strings connected**.

 Copyright © Huawei Technologies Co., Ltd.

No.	Parameter	Description	Remarks
24	Communication interrupted shutdown	The standards of certain countries and regions require that the inverter must shut down after the communication is interrupted for a certain time.	If **Communication interrupted shutdown** is set to **Enable** and the inverter communication is interrupted for a specified time (set by **Communication interruption duration**), the inverter will automatically shut down.
25	Communication resumed startup	If this parameter is set to **Enable**, the inverter automatically starts after communication recovers. If this parameter is set to **Disable**, the inverter needs to be started manually after communication recovers.	This parameter is displayed when **Communication interrupted shutdown** is set to **Enable**.
26	Communication interruption duration (min)	Specifies the duration for determining communication interruption. Used for automatic shutdown for protection in case of communication interruption.	-
27	Soft start time (s)	Specifies the duration for the power to gradually increase when the inverter starts.	-
28	Shutdown gradient (%/s)	Specifies the power change speed when the inverter shuts down.	-
29	Soft start time after grid failure (s)	Specifies the time for the power to gradually increase when the inverter restarts after the power grid recovers.	-
30	Hibernation night	The inverter monitors PV strings at night. If this parameter is set to **Enable**, the monitoring function of the inverter will hibernate at night to reduce power consumption.	-
31	MBUS communication	For inverters that support RS485 communication and MBUS communication, you are advised to set this parameter to **Disable** to reduce power consumption.	-

 Copyright © Huawei Technologies Co., Ltd.

No.	Parameter	Description	Remarks
32	Upgrade delay	This parameter is mainly used in the upgrade scenarios where the PV power supply is disconnected at night due to no sunlight or unstable at dawn or dusk due to poor sunlight.	After the inverter starts to upgrade, if **Upgrade delay** is set to **Enable**, the upgrade package is loaded first. After the PV power supply recovers and the activation conditions are met, the inverter automatically activates the upgrade.
33	RS485-2 communication	If this parameter is set to **Enable**, the RS485-2 port can be used. If the port is not used, you are advised to set this parameter to **Disable** to reduce power consumption.	-
34	String monitor	The inverter monitors PV strings in real time. If any PV string is abnormal (such as the PV string is shaded or the electric energy yield decreases), the inverter generates an alarm to remind maintenance personnel to maintain the PV string in a timely manner.	If PV strings are often shaded, you are advised to set **String monitor** to **Disable** to prevent false alarms.
35	Tracker controller	Selects a controller vendor.	-
36	String detection reference asymmetric coefficient	Specifies the threshold for determining PV string exception. The false alarms caused by fixed shadow shading can be controlled by changing this parameter.	This parameter is displayed when **String monitor** is set to **Enable**.
37	String detection starting power percentage (%)	Specifies the threshold for starting PV string exception detection. The false alarms caused by fixed shadow shading can be controlled by changing this parameter.	
38	Quick startup for short-time grid disconnection	Specifies whether to allow the device to quickly start after the power grid recovers from a short-time failure.	-

 Copyright © Huawei Technologies Co., Ltd.

No.	Parameter	Description	Remarks
39	Duration for determining short-time grid disconnection (ms)	The standards of certain countries and regions require that the inverter should not disconnect from the power grid if the power grid experiences a short-time failure. After the fault is rectified, the inverter output power needs to be quickly restored.	-
40	Output impedance enhancement	After **Output impedance enhancement** is enabled, you can set **Frequency to which output impedance enhancement applies** to increase the output impedance at this frequency.	-
41	Frequency to which output impedance enhancement applies (Hz)	Specifies the frequency to which output impedance enhancement applies.	This parameter is displayed when **Output impedance enhancement** is set to **Enable**.

7.1.4.4 Setting Power Adjustment Parameters

Choose **Settings** > **Power adjustment** to go to the parameter setting screen.

No.	Parameter	Description	Remarks
1	Remote power schedule	If this parameter is set to **Enable**, the inverter responds to the scheduling instruction from the remote port. If this parameter is set to **Disable**, the inverter does not respond to the scheduling instruction from the remote port.	-
2	Schedule instruction valid duration (s)	Specifies the time for maintaining the scheduling instruction.	When this parameter is set to 0, the scheduling instruction takes effect permanently.
3	Maximum apparent power (kVA)	Specifies the output upper threshold for the maximum apparent power to adapt to the capacity requirements of standard and customized inverters.	If the maximum active power equals the value of Smax_limit, this parameter is not displayed.
4	Maximum active power (kW)	Specifies the output upper threshold for the maximum active power to adapt to different market requirements.	-

 Copyright © Huawei Technologies Co., Ltd.

No.	Parameter	Description	Remarks
5	Shutdown at 0% power limit	If this parameter is set to **Enable**, the inverter shuts down after receiving the 0% power limit command. If this parameter is set to **Disable**, the inverter does not shut down after receiving the 0% power limit command.	-
6	Active power change gradient (%/s)	Specifies the change speed of the inverter active power.	-
7	Derated by active power % (0.1%)	Adjusts the active power output of the inverter by percentage.	If this parameter is set to **100**, the inverter outputs based on the maximum output power.
8	Active power derating in absolute power (kW)	Adjusts the active power output of the inverter by fixed value.	-
9	Reactive power change gradient (%/s)	Specifies the change speed of the inverter reactive power.	-
10	Reactive power adjustment time (s)	Specifies the adjustment time for the reactive power to reach the target value during reactive power adjustment.	-
11	Power factor	Specifies the power factor of the inverter.	-
12	Reactive power compensation (Q/S)	Specifies the reactive power output by the inverter.	-
13	Overfrequency derating	If this parameter is set to **Enable**, the active power of the inverter will be derated according to a certain slope when the grid frequency exceeds the frequency that triggers overfrequency derating.	-
14	Trigger frequency of overfrequency derating (Hz)	The standards of certain countries and regions require that the output active power of inverters be derated when the power grid frequency exceeds a certain value.	• This parameter is displayed when **Overfrequency derating** is set to **Enable**. • When setting this parameter, ensure that the following condition is met: **Quit frequency of**

 Copyright © Huawei Technologies Co., Ltd.

No.	Parameter	Description	Remarks
15	Quit frequency of overfrequency derating (Hz)	Specifies the frequency threshold for exiting overfrequency derating.	**overfrequency derating** ≤ **Trigger frequency of overfrequency derating** < **Cutoff frequency of overfrequency derating**.
16	Cutoff frequency of overfrequency derating (Hz)	Specifies the frequency threshold for cutting off overfrequency derating.	
17	Cutoff power of overfrequency derating (%)	Specifies the power threshold for cutting off overfrequency derating.	
18	Power recovery gradient of overfrequency derating (%/min)	Specifies the recovery rate of the overfrequency derating power.	
19	PF-U voltage detection filtering time (s)	Specifies the time for filtering the grid voltage in the PF-U curve.	-
20	Active power baseline (kW)	Adjusts the active output baseline of the inverter.	The apparent power baseline must be greater than or equal to the active power baseline.
21	Apparent power baseline (kVA)	Adjust the apparent output baseline of the inverter.	
22	Communication disconnection fail-safe	In the inverter export limitation scenario, if this parameter is set to **Enable**, the inverter will perform active power derating by percentage when the communication between the inverter and the SmartLogger or Smart Dongle is disconnected for more than the time specified by **Communication disconnection detection time**.	-
23	Communication disconnection detection time (s)	Specifies the fail-safe detection time for the disconnection between the inverter and the SmartLogger or Smart Dongle.	This parameter is displayed when **Communication disconnection fail-safe** is set to **Enable**.
24	Active power mode when communication fails	Specifies the protection threshold of the active power after communication is interrupted. The value can be a percentage or a fixed value.	

 Copyright © Huawei Technologies Co., Ltd.

No.	Parameter	Description	Remarks
25	Active power threshold when communication fails (%)	Specifies the active power threshold in percentage.	This parameter is displayed when**Communication disconnection fail-safe** is set to **Enable** and **Active power mode when communication fails** is set to a percentage.
26	Reactive power mode when communication fails	Specifies the protection threshold of the reactive power after communication is interrupted, including Q/S and power factor.	This parameter is displayed when **Communication disconnection fail-safe** is set to **Enable**.
27	Reactive power threshold when communication fails	Specifies the Q/S threshold of the reactive power.	This parameter is displayed when **Communication disconnection fail-safe** is set to **Enable** and **Reactive power mode when communication fails** is set to **Power factor**.
28	Closed-loop controller	• If multiple inverters are cascaded, the Smart Dongle or SmartLogger is connected, and closed-loop scheduling is enabled, set this parameter to **SDongle/SmartLogger**. • If there is only one inverter and closed-loop scheduling is enabled, set this parameter to **Inverter.** • If closed-loop scheduling is disabled, retain the default value.	-
29	Underfrequency rise power	The standards of certain countries and regions require that when the power grid frequency is lower than the frequency threshold for power raising, the device needs to increase the active power output to help increase the power grid frequency. In this case, set this parameter to **Enable**.	-
30	Power recovery gradient of underfrequency rise power (%/min)	Specifies the power recovery rate of underfrequency-caused raising.	This parameter is displayed when **Underfrequency rise power** is set to **Enable**.
31	Cutoff frequency of underfrequency rise power (Hz)	Specifies the frequency threshold for stopping underfrequency-caused raising.	

 Copyright © Huawei Technologies Co., Ltd.

No.	Parameter	Description	Remarks
32	Cutoff power of underfrequency rise power (%)	Specifies the power threshold for stopping underfrequency-caused raising.	
33	Trigger frequency of underfrequency rise power (Hz)	Specifies the frequency threshold for power raising.	
34	Quit frequency of underfrequency rise power (Hz)	Specifies the exit frequency of power raising caused by underfrequency.	
35	Limit value for minimum PF of Q-U characteristic curve	Specifies the minimum power factor for Q-U adjustment.	-
36	Power percentage for triggering Q-U scheduling	Specifies the reference apparent power in percent. When the actual apparent power of the device is greater than the value of this parameter, the Q-U characteristic curve scheduling function is enabled.	-
37	Q-U characteristic curve	The device adjusts Q/S (the ratio of the output reactive power to apparent power) in real time based on **U/Un(%)** (the ratio of the actual power grid voltage to the rated power grid voltage).	-
38	Q-P characteristic curve	The device adjusts Q/Pmax (the ratio of the reactive power to the maximum active power) in real time based on P/Pmax (the ratio of the active power to the maximum active power).	-
39	Cosϕ-P/Pn characteristic curve	The device adjusts the output power factor cosϕ in real time based on P/Pn (%).	-

7.2 (Optional) Installing a Smart Dongle

Communication parameters have been set for the solar inverter.

Step 1 Install the SIM card.

NOTE

- If the Smart Dongle is configured with a SIM card, you do not need to perform this step.
- If the Smart Dongle is not configured with a SIM card, you need to prepare a standard SIM card (size: 25 mm x 15 mm; capacity: ≥ 64 KB).
- When installing the SIM card, determine its installation direction based on the silk screen and arrow on the card slot.
- Press the SIM card in place to lock it. In this case, the SIM card is correctly installed.
- When removing the SIM card, push it inward to eject it.
- When reinstalling the cover of the Smart Dongle, ensure that the buckle springs back in place.

Step 2 Secure the Smart Dongle.

Figure 7-7 Installing the Smart Dongle

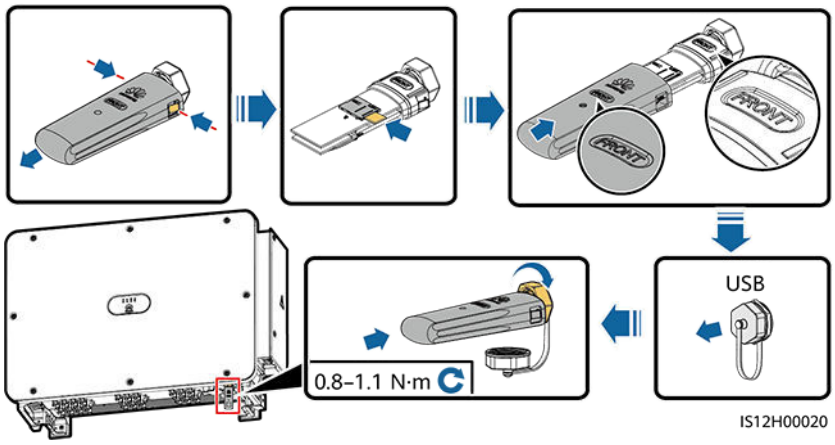

----End

7.3 Upgrading the Inverter

USB flash drives of SanDisk, Netac, and Kingston are recommended. Other brands may be incompatible.

NOTE

Delete the script file immediately after use to reduce information disclosure risks.

Procedure

Step 1 Download the required software upgrade package from the technical support website.

Step 2 Decompress the upgrade package and copy all files to the root directory of the USB flash drive.

NOTICE

Do not modify the content in the upgrade package because the files involve RSA signature verification. If you modify the content, the upgrade will fail.

Step 3 Connect the USB flash drive to the USB port. The system automatically identifies the USB flash drive and executes all commands specified in the boot script file. View the LED indicator to determine the operating status.

Table 7-1 LED indicator description

LED Indicator	Status	Meaning
	Green off	There is no operation with a USB flash drive.
	Blinking green slowly	There is an operation with a USB flash drive.
	Blinking green fast	An operation with a USB flash drive has failed.
	Steady green	An operation with a USB flash drive is successful.

Step 4 The system automatically restarts when the upgrade is completed. All LED indicators are off during the restart. After the restart, the indicator is blinking green slowly for 1 minute and then it becomes steady green, which indicates that the upgrade is successful.

----End

 Copyright © Huawei Technologies Co., Ltd.

8 Maintenance

8.1 Shutdown and Power-Off

Context

WARNING

- If two SUN2000s share the same AC switch on the AC side, power off the two SUN2000s.
- After the SUN2000 powers off, the remaining electricity and heat may still cause electric shocks and body burns. Therefore, put on protective gloves and begin servicing the SUN2000 15 minutes after the power-off.

Procedure

Step 1 Run a shutdown command on the SUN2000 app, SmartLogger, or NMS.

For details, see **7 Man-Machine Interactions**, or the SmartLogger or NMS user manual.

Step 2 Turn off the AC switch between the SUN2000 and the power grid.

Step 3 Set all DC switches to OFF.

----End

8.2 Power-Off for Troubleshooting

Context

To prevent personal injury and equipment damage, perform the following procedure to power off the solar inverter for troubleshooting or replacement.

 Copyright © Huawei Technologies Co., Ltd.

CAUTION

- When a solar inverter is faulty, try to avoid standing in front of the solar inverter.
- If the LED1 indicator of the inverter is off, the switches are in the OFF position, do not operate the DC switches of the inverter. In this case, go to **Step 4**.
- Do not operate the DC switch on the solar inverter before you finish **Step 3** to **Step 5**.
- The DC switch can be automatically disconnected when an internal fault is detected in an inverter. Do not turn on the switch before the fault is cleared.
- If the AC switch between the solar inverter and the power grid has automatically disconnected, do not turn on the switch before the fault is rectified.
- Before power-off for troubleshooting, do not touch the energized components of the solar inverter. Otherwise, electric shocks or arcing may occur.

Procedure

Step 1 Wear proper personal protective equipment (PPE).

Step 2 If the solar inverter is not shut down due to a fault, send a shutdown command on the SUN2000 app, SmartLogger, or management system. If the solar inverter has shut down due to a fault, go to the next step.

Step 3 Turn off the AC switch between the solar inverter and the power grid.

Step 4 Measure the DC current of each PV input string using a clamp meter that is set to the DC position.

- If the current is less than or equal to 0.5 A, go to the next step.
- If the current is higher than 0.5 A, wait until the solar irradiance decreases and the PV string current decreases below 0.5 A at night, and then go to the next step.

Step 5 Open the maintenance compartment door, install a support bar, and use a multimeter to measure the phase voltages of the AC terminal block. Ensure that the AC side of the solar inverter is disconnected.

Step 6 Turn off all DC input switches of the solar inverter.

 Copyright © Huawei Technologies Co., Ltd.

Figure 8-1 Power-off for maintenance

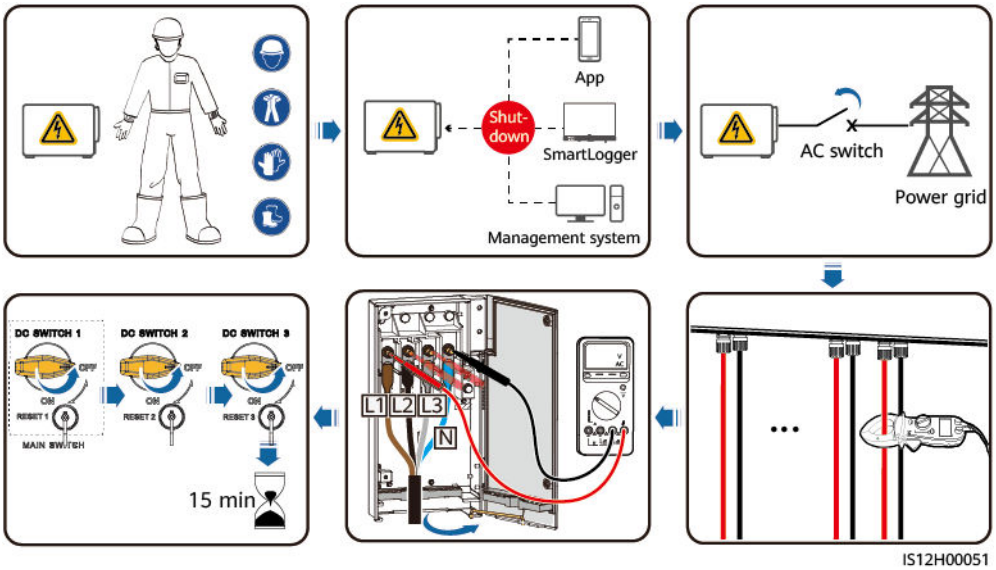

Step 7 Wait for 15 minutes and troubleshoot or repair the inverter.

WARNING

- Do not open the host panel for maintenance if the solar inverter is emitting odor or smoke, or has obvious exceptions.
- If the solar inverter does not emit odor or smoke and is intact, repair or restart it based on the alarm handling suggestions. Do not stand in front of the solar inverter during the restart.

----End

8.3 Routine Maintenance

To ensure that the solar inverter can operate properly for a long term, you are advised to perform routine maintenance on it as described in this chapter.

CAUTION

- Before cleaning the system, connecting cables, and maintaining the grounding reliability, power off the system and ensure that the all DC switches on the solar inverter are OFF.
- If you need to open the maintenance compartment door in rainy or snowy days, take protective measures to prevent rain or snow from entering the maintenance compartment. If unavoidable, do not open the maintenance compartment door.

 Copyright © Huawei Technologies Co., Ltd.

Table 8-1 Maintenance list

Check Item	Check Method	Maintenance Interval
Cleanness of air intake and exhaust vents, and fans	• Check whether there is dust on the air intake and exhaust vents. If necessary, remove the baffle of the air intake vent and clean the dust. • Check whether the fans produce abnormal sounds during operation.	Once every 6 to 12 months
System running status	• The solar inverter is not damaged or deformed. • The solar inverter operates with no abnormal sound. • All solar inverter parameters are correctly set. Perform this check when the solar inverter is running.	Once every 6 months
Cables connections	• Cables are securely connected. • Cables are intact, and in particular, the parts touching the metallic surface are not scratched. • Check whether the sealing caps of idle DC input terminals fall off. • Unused terminals and ports are locked by watertight caps.	The first inspection is 6 months after the initial commissioning. From then on, the interval can be 6 to 12 months.
Grounding reliability	Ground cables are securely connected.	The first inspection is 6 months after the initial commissioning. From then on, the interval can be 6 to 12 months.
Clear vegetation around the inverters	• Perform inspection and weeding as required. • Clean the site promptly after weeding.	Based on the local wilting season

 Copyright © Huawei Technologies Co., Ltd.

Figure 8-2 Removing the baffle of the air intake vent

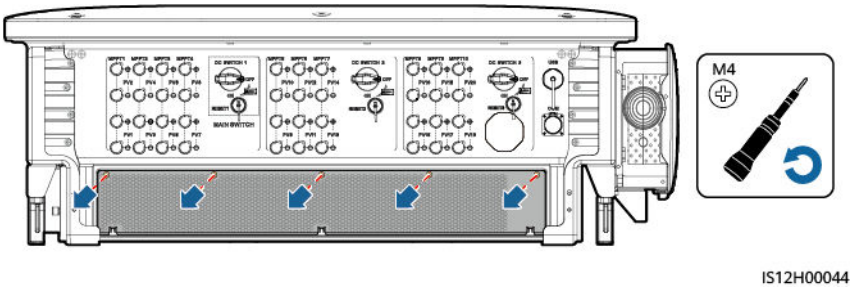

NOTICE

After the cleaning is complete, reinstall the baffle plate. Tighten the screws with a torque of 1.2 N·m.

8.4 Troubleshooting

Alarm severities are defined as follows:

- Major: The inverter is faulty or the external environment is abnormal. As a result, the output power decreases or the inverter stops feeding into the grid.
- Minor: Some components are faulty without affecting the grid-tied power generation.
- Warning: The solar inverter works properly. The output power decreases or some authorization functions fail due to external factors.

 Copyright © Huawei Technologies Co., Ltd.

Table 8-2 Common alarms and troubleshooting measures

Alarm ID	Alarm Name	Alarm Severity	Possible Cause	Suggestion
2001	High String Input Voltage	Major	• Cause ID = 1: PV1 and PV2 • Cause ID = 2: PV3 and PV4 • Cause ID = 3: PV5 and PV6 • Cause ID = 4: PV7 and PV8 • Cause ID = 5: PV9 and PV10 • Cause ID = 6: PV11 and PV12 • Cause ID = 7: PV13 and PV14 • Cause ID = 8: PV15 and PV16 • Cause ID = 9: PV17 and PV18 • Cause ID = 10: PV19 and PV20 The PV array is not properly configured. Excessive PV modules are connected in series to a PV string, and therefore the PV string open-circuit voltage exceeds the maximum operating voltage of the solar inverter.	Reduce the number of PV modules connected in series in the PV string until the PV string open-circuit voltage is not greater than the maximum operating voltage of the solar inverter. After the PV array configuration is corrected, the alarm disappears.
2003	DC arc fault	Major	Cause ID = 1–20: PV1–PV20 The PV string power cables arc or are in poor contact.	Check whether the PV string cables arc or are in poor contact.
2011	String Reverse Connection	Major	Cause ID = 1–20: PV1–PV20 The PV string is reversely connected.	Check whether the PV string is reversely connected to the solar inverter. If yes, wait until the solar irradiance declines at night and the PV string current drops below 0.5 A. Then, turn off the DC switches and correct the PV string connection.

 Copyright © Huawei Technologies Co., Ltd.

Alarm ID	Alarm Name	Alarm Severity	Possible Cause	Suggestion
2012	String Current Backfeed	Warning	Cause ID = 1–20: PV1–PV20 Only a few PV modules are connected in series in the PV string. Therefore, the terminal voltage is lower than that of other PV strings.	1. Check whether the number of PV modules connected in series in the PV string is less than that in other PV strings connected in parallel. If yes, wait until the solar irradiance declines at night and the PV string current drops below 0.5 A. Then, turn off the DC switches and add more PV modules. 2. Check whether the PV string is shaded. 3. Check whether the open-circuit voltage of the PV string is normal.

 Copyright © Huawei Technologies Co., Ltd.

Alarm ID	Alarm Name	Alarm Severity	Possible Cause	Suggestion
2014	High Input String Voltage to Ground	Major	Cause ID = 1 The voltage between the input PV string and the ground is abnormal, and there is a risk of power attenuation.	1. If no PID compensation device exists in the system, disable the PID protection function at night. Note: If the PID protection function is disabled but reactive power compensation at night is enabled, PV modules may attenuate. 2. If there is a PID compensation device in the system, check whether it is faulty. If yes, rectify the fault. 3. Check whether the settings of compensation direction for the solar inverter and the PID device are consistent. If not, set them to be consistent based on the PV module model. (Note: If the PV– is set to positive offset, the voltage between the solar inverter PV– and the ground should be greater than 0 V to clear the alarms; if the PV+ is set to negative offset, the voltage between the solar inverter PV+ and the ground should be less than 0 V to clear the alarms.) 4. If the fault occurs frequently, contact technical support.
2015	PV String Loss	Warning	Cause ID = 1–20 This alarm is generated when the PV string status is abnormal due to the following conditions: a single PV string is lost; both 2-in-1 PV strings are lost; one of the 2-in-1 PV strings is lost.	1. Check whether the solar inverter terminals are properly connected. 2. Check whether the PV string terminals are properly connected. 3. If a 2-in-1 terminal is used, check whether it is normal.

 Copyright © Huawei Technologies Co., Ltd.

Alarm ID	Alarm Name	Alarm Severity	Possible Cause	Suggestion
2021	AFCI self-check failure	Major	Cause ID = 1, 2 The AFCI self-check fails.	Turn off the AC output switch and then the DC input switches. After 5 minutes, turn them on in the same sequence. If the fault persists, contact technical support.
2031	Phase Wire Short-Circuited to PE	Major	Cause ID = 1 The impedance of the output phase wire to PE is low or the output phase wire is short-circuited to PE.	Check the impedance of the output phase wire to PE, locate the position with lower impedance, and rectify the fault.
2032	Grid Loss	Major	Cause ID = 1 1. The power grid experiences an outage. 2. The AC circuit is disconnected or the AC switch is off.	1. Check the AC voltage. 2. Check whether the AC circuit is disconnected or the AC switch is off.
2033	Grid Undervoltage	Major	Cause ID = 1 The grid voltage is below the lower threshold or the undervoltage duration exceeds the time that triggers low voltage ride-through (LVRT).	1. If the alarm occurs occasionally, the power grid may be abnormal temporarily. The solar inverter automatically recovers after detecting that the power grid becomes normal. 2. If the alarm occurs frequently, check whether the power grid voltage is within the acceptable range. If not, contact the local power operator. If yes, log in to the mobile app, SmartLogger, or network management system (NMS) to modify the grid undervoltage protection threshold with the consent of the local power operator. 3. If the fault persists for a long time, check the AC circuit breaker and AC output power cable.

 Copyright © Huawei Technologies Co., Ltd.

Alarm ID	Alarm Name	Alarm Severity	Possible Cause	Suggestion
2034	Grid Overvoltage	Major	Cause ID = 1 The grid voltage exceeds the upper threshold or the overvoltage duration exceeds the time that triggers high voltage ride-through (HVRT).	1. Check whether the grid connection voltage exceeds the upper threshold. If yes, contact the local power operator. 2. If you have confirmed that the grid connection voltage exceeds the upper threshold and have obtained the consent of the local power operator, modify the overvoltage protection threshold. 3. Check whether the peak grid voltage exceeds the upper threshold.
2035	Grid Volt. Imbalance	Major	Cause ID = 1 The difference between grid phase voltages exceeds the upper threshold.	1. Check that the grid voltage is within the normal range. 2. Check that the AC output power cable is correctly connected. If the AC output power cable is correctly connected, yet the alarm persists and affects the energy yield of the PV plant, contact the local power operator.

 Copyright © Huawei Technologies Co., Ltd.

Alarm ID	Alarm Name	Alarm Severity	Possible Cause	Suggestion
2036	Grid Overfrequency	Major	Cause ID = 1 Power grid exception: The actual power grid frequency is higher than the standard requirement for the local power grid.	1. If the alarm occurs occasionally, the power grid may be abnormal temporarily. The solar inverter automatically recovers after detecting that the power grid becomes normal. 2. If the alarm occurs frequently, check whether the power grid frequency is within the acceptable range. If not, contact the local power operator. If yes, log in to the mobile phone app, SmartLogger, or NMS to modify the power grid overfrequency protection threshold with the consent of the local power operator.
2037	Grid Underfrequency	Major	Cause ID = 1 Power grid exception: The actual power grid frequency is lower than the standard requirement for the local power grid.	1. If the alarm occurs occasionally, the power grid may be abnormal temporarily. The solar inverter automatically recovers after detecting that the power grid becomes normal. 2. If the alarm occurs frequently, check whether the power grid frequency is within the acceptable range. If not, contact the local power operator. If yes, log in to the mobile phone app, SmartLogger, or NMS to modify the power grid underfrequency protection threshold with the consent of the local power operator.

 Copyright © Huawei Technologies Co., Ltd.

Alarm ID	Alarm Name	Alarm Severity	Possible Cause	Suggestion
2038	Unstable Grid Frequency	Major	Cause ID = 1 Power grid exception: The actual grid frequency change rate does not comply with the local power grid standard.	1. If the alarm occurs occasionally, the power grid may be abnormal temporarily. The solar inverter automatically recovers after detecting that the power grid becomes normal. 2. If the alarm occurs frequently, check whether the grid frequency is within the acceptable range. If not, contact the local power operator.
2039	Output Overcurrent	Major	Cause ID = 1 The power grid voltage drops dramatically or the power grid is short-circuited. As a result, the solar inverter transient output current exceeds the upper threshold and therefore the solar inverter protection is triggered.	1. The solar inverter detects its external working conditions in real time. After the fault is rectified, the solar inverter automatically recovers. 2. If the alarm occurs frequently and affects the energy yield of the PV plant, check whether the output is short-circuited. If the fault cannot be rectified, contact your dealer or technical support.
2040	Output DC Component Overhigh	Major	Cause ID = 1 The DC component of the solar inverter output current exceeds the specified upper threshold.	1. If the exception is caused by an external fault, the solar inverter automatically recovers after the fault is rectified. 2. If the alarm occurs frequently, contact your dealer or technical support.

 Copyright © Huawei Technologies Co., Ltd.

Alarm ID	Alarm Name	Alarm Severity	Possible Cause	Suggestion
2051	Abnormal Residual Current	Major	Cause ID = 1 The insulation impedance of the input side to PE decreases when the solar inverter is operating.	1. If an alarm is generated, check whether the impedance between PV strings and the ground is too low, or a PV string is short-circuited to the ground due to damage. 2. If the alarm occurs frequently or persists, check whether the impedance between the PV string and the ground is too low.
2061	Abnormal Grounding	Major	Cause ID = 1 The neutral wire or PE wire is not connected when **Output mode** of the solar inverter is set to **Three-phase four-wire**.	1. Check that the neutral wire and PE wire of the solar inverter are properly connected. 2. Check whether the voltage between the neutral wire and the ground exceeds 30 V. If yes, set **Output mode** to **Three-phase three-wire** on the mobile app, SmartLogger, or NMS after obtaining the consent of the local power operator.
2062	Low Insulation Resistance	Major	Cause ID = 1 1. The PV string is short-circuited to PE. 2. The PV string has been in a moist environment for a long time and the circuit is not well insulated to ground.	1. Check the impedance of the PV string to PE. If a short circuit occurs or the insulation is insufficient, rectify it. 2. Check that the PE cable of the solar inverter is correctly connected. 3. If you are sure that the impedance is less than the default value in a cloudy or rainy environment, reset **Insulation resistance protection**.

 Copyright © Huawei Technologies Co., Ltd.

Alarm ID	Alarm Name	Alarm Severity	Possible Cause	Suggestion
2063	Cabinet Overtemperature	Minor	Cause ID = 1 1. The solar inverter is installed in a place with poor ventilation. 2. The ambient temperature is too high. 3. The solar inverter is not working properly.	1. Check the ventilation and whether the ambient temperature of the solar inverter exceeds the upper limit. If the ventilation is poor or the ambient temperature is too high, improve ventilation. 2. If both the ventilation and ambient temperature meet requirements yet the fault persists, contact your dealer or technical support.
2064	Device Fault	Major	Cause ID = 1-5, 7-12 A fault occurs on the internal inverter circuit.	● Cause ID = 1 Wait until the PV string current decreases to below 0.5 A, and then turn off all DC switches. If the fault persists, contact your dealer or technical support. ● Cause ID = 2-5, 7-12 Turn off the AC output switch and then the DC input switches. After 5 minutes, turn them on in the same sequence. If the fault persists, contact technical support.
2065	Upgrade Failed or Software Version Unmatch	Minor	Cause ID = 1–4 The upgrade does not complete normally.	1. Perform an upgrade again. 2. If the update fails for multiple times, contact your dealer or technical support.
2066	License Expired	Warning	Cause ID = 1 1. The privilege license has entered the grace period. 2. The privilege feature will be invalid soon.	1. Apply for a new license. 2. Load a new license.

 Copyright © Huawei Technologies Co., Ltd.

Alarm ID	Alarm Name	Alarm Severity	Possible Cause	Suggestion
2067	Faulty Power Collector	Major	Cause ID = 1 The power meter is disconnected.	1. Check whether the configured power meter model is the same as the actual model. 2. Check whether the communications parameters of the power meter are the same as the RS485 configurations of the solar inverter. 3. Check whether the power meter is powered on and whether the RS485 communications cable is connected.
2085	Built-in PID operation abnormal	Minor	Cause ID = 1, 2 ● The output resistance of PV arrays to ground is low. ● The system insulation resistance is low.	● Cause ID = 1 1. Turn off the AC output switch and DC input switch, wait for a period of time (for details about the wait time, see the description on the device safety warning label), and then turn on the DC input switch and AC output switch. 2. If the fault persists, contact your dealer or technical support. ● Cause ID = 2 1. Check the impedance between the PV array output and the ground. If a short circuit occurs or the insulation is insufficient, rectify the fault. 2. If the fault persists, contact your dealer or technical support.

 Copyright © Huawei Technologies Co., Ltd.

Alarm ID	Alarm Name	Alarm Severity	Possible Cause	Suggestion
2086	External Fan Abnormal	Major	Cause ID = 1–3: FAN 1–3 The external fan is short-circuited, the power supply is insufficient, or the air channel is blocked.	1. Shut down the fan, turn off the DC switch, check whether the fan blades are damaged, and clear the foreign matter around the fan. 2. Reinstall the fan, turn on the DC switch, and wait for the solar inverter to start. If the fault persists after 15 minutes, replace the external fan.
2087	Internal Fan Abnormal	Major	Cause ID = 1 The internal fan is short-circuited, the power supply is insufficient, or the fan is damaged.	Turn off the AC output switch and then the DC input switch. Turn them on after 5 minutes and wait for the solar inverter to connect to the power grid. If the fault persists after 5 minutes, contact your dealer or technical support for replacement.

 Copyright © Huawei Technologies Co., Ltd.

Alarm ID	Alarm Name	Alarm Severity	Possible Cause	Suggestion
2088	Abnormal DC protection unit	Major	• Cause ID = 1 The fuse is not in position or is blown. • Cause ID = 2 The two relays on the breaking board are open-circuited. • Cause ID = 3 The contact points of the DC switches are stuck.	• Cause ID = 1/2 Turn off the AC output switch and DC input switch, and then turn them on after 5 minutes. Wait for the inverter to connect to the power grid. If the alarm persists after 5 minutes, contact your dealer or technical support. • Cause ID = 3 If the PV indicator (LED1) is off, contact your dealer or Huawei technical support to replace the device. If the PV indicator (LED1) is on, wait until the PV string current decreases to below 0.5 A. Then turn off the AC output switch and then the DC input switch. After 5 minutes, turn on the AC output switch and the DC input switch. Wait until the inverter connects to the power grid. If the fault persists after 5 minutes, contact your dealer or technical support for replacement.
2093	Abnormal DC Switches	Minor	Cause ID=1 The DC switch is not in the ON position, or the DC switch reset button is not pressed down to the bottom.	Check whether all DC switches are in the ON position. If not, turn the switches to the ON position (you can rotate the switches with force to ensure that they are in position). If the switches still cannot be turned to the ON position, press the reset buttons of all DC switches inwards until they cannot be moved further, and then turn on the DC switches again.

 Copyright © Huawei Technologies Co., Ltd.

Alarm ID	Alarm Name	Alarm Severity	Possible Cause	Suggestion
61440	Faulty Monitoring Unit	Minor	Cause ID = 1 1. The flash memory is insufficient. 2. The flash memory has bad sectors.	Turn off the AC output switch and then the DC input switches. After 5 minutes, turn them on in the same sequence. If the fault persists, replace the monitoring board, or contact your dealer or technical support.

NOTE

If you cannot rectify the fault using the recommended method in the **Suggestion** column, contact your dealer or technical support.

8.5 Replacing a Fan

CAUTION

- Before replacing a fan, power off the inverter.
- When replacing a fan, use insulation tools and wear personal protective devices.

NOTE

If the fan tray gets stuck when being pulled or pushed, slightly lift it.

Step 1 Remove the screw on the fan tray and save it. Pull out the fan tray until the fan baffle plate aligns with the inverter chassis.

Figure 8-3 Pulling out fan tray (1)

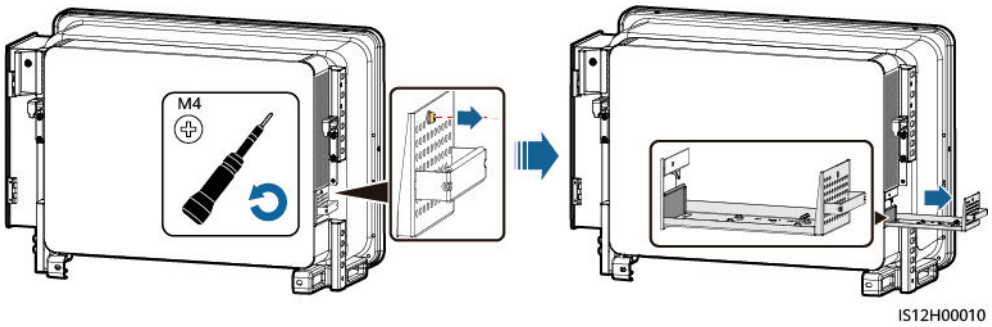

Step 2 Remove the cable ties shared by the cables, unscrew the connectors, and disconnect the cables.

Figure 8-4 Disconnecting cables

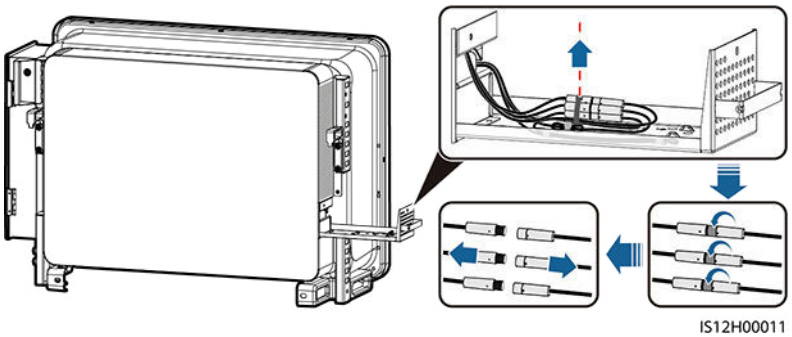

Step 3 Pull out the fan tray.

Figure 8-5 Pulling out fan tray (2)

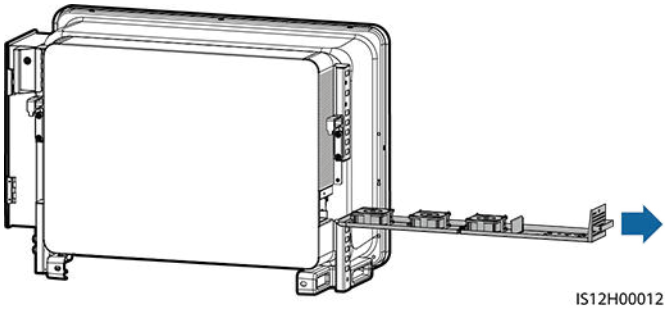

Step 4 Remove cable ties from the faulty fan.

- FAN 1 Faulty

Figure 8-6 Removing the FAN 1 cable ties

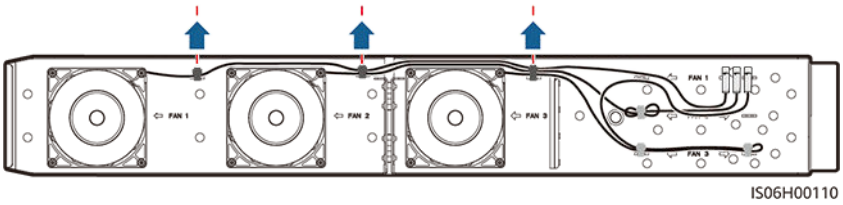

- FAN 2 Faulty

Figure 8-7 Removing the FAN 2 cable ties

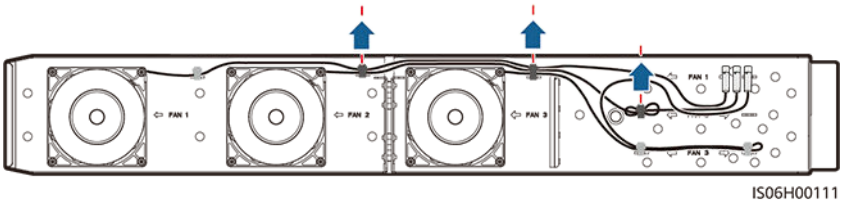

- FAN 3 Faulty

Figure 8-8 Removing the FAN 3 cable ties

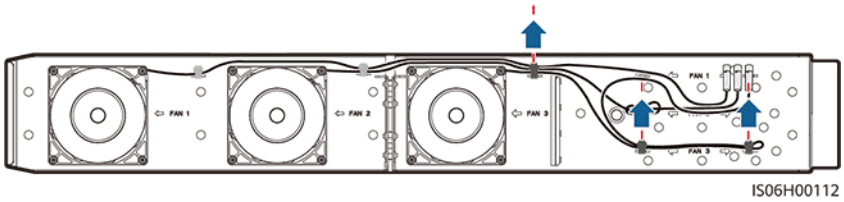

Step 5 Remove the faulty fan (FAN 1 is used as an example).

Figure 8-9 Removing the fan

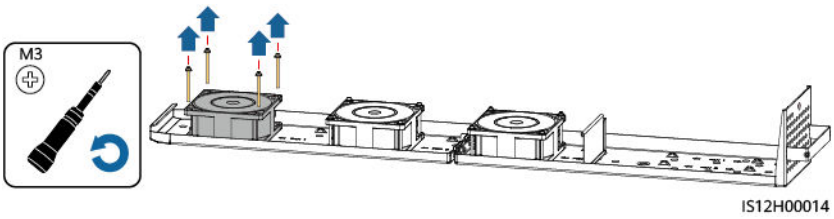

Step 6 Install the new fan (FAN 1 is used as an example).

Figure 8-10 Installing a new fan

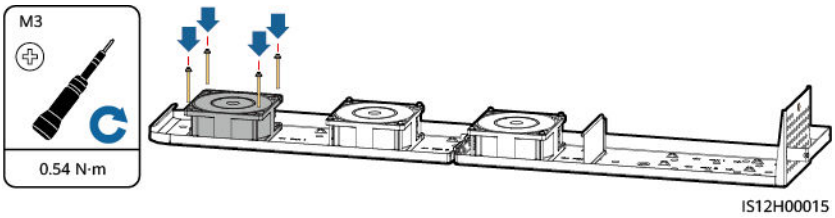

Step 7 Bind the fan cables.

- Binding positions for fan 1

Figure 8-11 Binding the FAN 1 cables

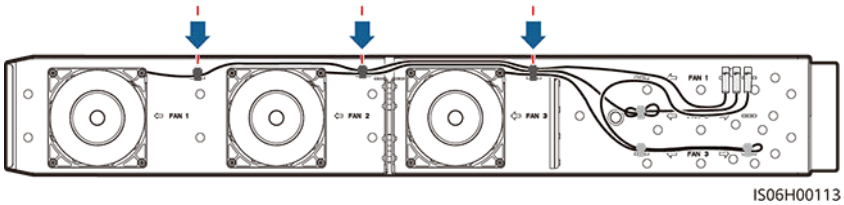

- Binding positions for fan 2

Figure 8-12 Binding the FAN 2 cables

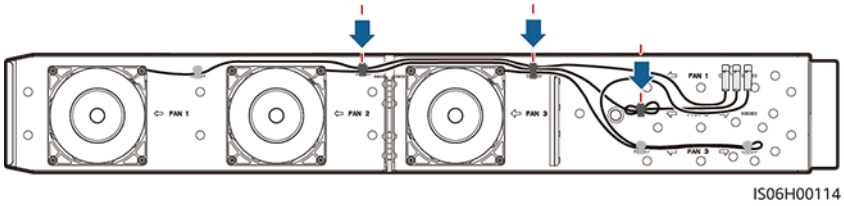

- Binding positions for fan 3

Figure 8-13 Binding the FAN 3 cables

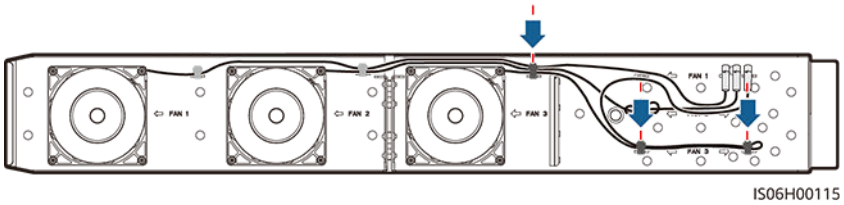

Step 8 Push the fan tray into the slot until the fan baffle plate aligns with the inverter chassis.

Figure 8-14 Pushing the fan tray in

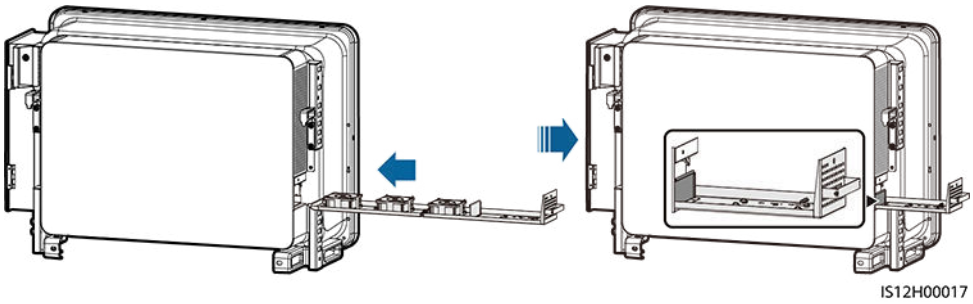

Step 9 Connect the cables correctly according to the cable labels and bind the cables.

Figure 8-15 Reconnecting and binding the cables

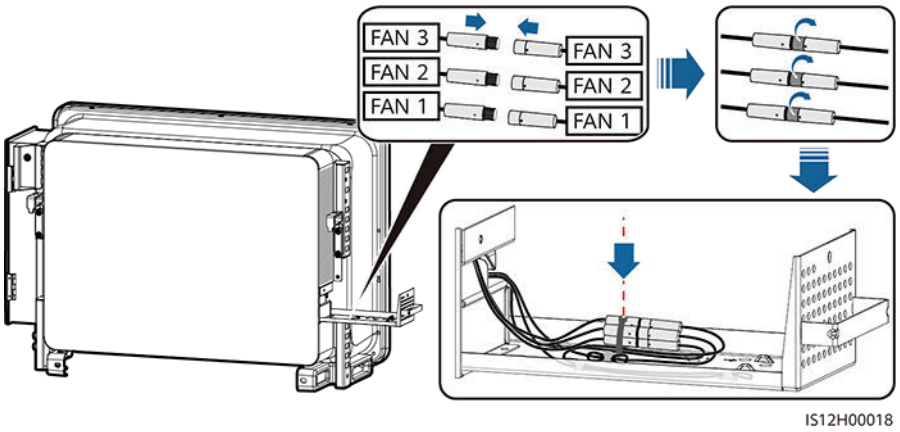

Step 10 Push the fan tray into the slot and tighten the screw.

Figure 8-16 Reinstalling the fan tray

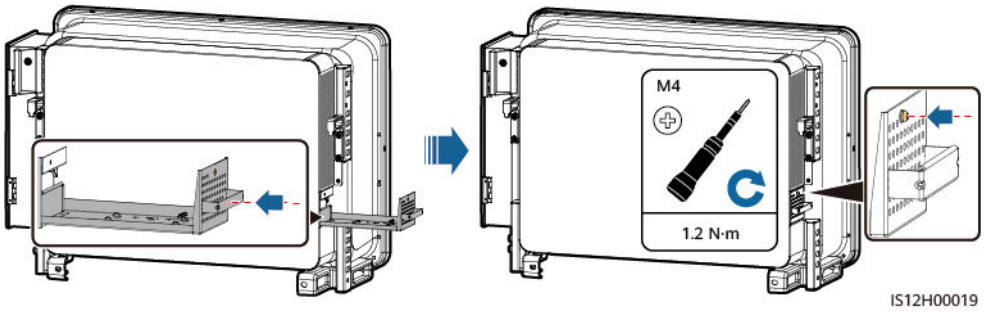

----End

8.6 Resetting and Turning On the DC Switch

Prerequisites

If internal inverter fault is displayed on the mobile app or remote monitoring system and the DC switch is OFF, the DC switch of the inverter has been automatically turned off. In this case, rectify the fault based on the alarm handling suggestions before turning on the DC switch.

Procedure

Step 1 Loosen the caps of the RESET buttons for the three DC switches, and press the RESET buttons inwards until you cannot go any further.

Step 2 Set the DC switches to **ON**.

Step 3 Tighten the caps of the RESET buttons.

Figure 8-17 Resetting and turning on the DC switch (DC SWITCH 1 is used as an example)

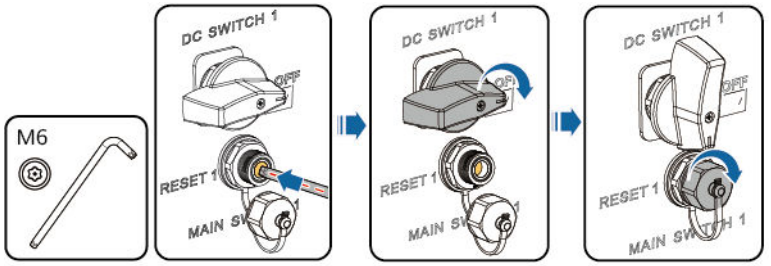

----End

9 Handling the Inverter

9.1 Removing the SUN2000

NOTICE

Before removing the SUN2000, disconnect both AC and DC connections.

Perform the following operations to remove the SUN2000:

1. Disconnect all cables from the SUN2000, including RS485 communications cables, DC input power cables, AC output power cables, and PGND cables.
2. Remove the SUN2000 from the mounting bracket.
3. Remove the mounting bracket.

9.2 Packing the SUN2000

- If the original packing materials are available, put the SUN2000 inside them and then seal them by using adhesive tape.
- If the original packing materials are not available, put the SUN2000 inside a suitable cardboard box and seal it properly.

9.3 Disposing of the SUN2000

If the SUN2000 service life expires, dispose of it according to the local disposal rules for electrical equipment waste.

 Copyright © Huawei Technologies Co., Ltd.

10 Technical Specifications

Efficiency

Item	SUN2000-115KTL-M2	SUN2000-110KTL-M2	SUN2000-100KTL-M2	SUN2000-100KTL-INM2
Maximum efficiency	≥ 98.6% (400 V) and ≥ 98.8% (480 V)	≥ 98.6% (380 V/400 V)	≥ 98.6% (380 V/400 V) and ≥ 98.8% (480 V)	≥ 98.6% (415 V) and ≥ 98.8% (480 V)
Chinese efficiency	-	98.1% (380 V) 98.2% (400 V)	-	-
European efficiency	≥ 98.4% (400 V) and ≥ 98.6% (480 V)	-	≥ 98.4% (380 V/400 V) and ≥ 98.6% (480 V)	≥ 98.4% (415 V) and ≥ 98.6% (480 V)

Input

Item	SUN2000-115KTL-M2	SUN2000-110KTL-M2	SUN2000-100KTL-M2	SUN2000-100KTL-INM2
Maximum input voltage[a]	1100 V			
Operating voltage range[b]	200–1000 V			
Minimum startup voltage	200 V			
Full-load MPPT voltage range	540–800 V (400 V) and 625–850 V (480 V)	540–800 V (380 V/400 V)	540–800 V (380 V/400 V) and 625–850 V (480 V)	540–800 V (415 V) and 625–850 V (480 V)

 Copyright © Huawei Technologies Co., Ltd.

Item	SUN2000-115KTL-M2	SUN2000-110KTL-M2	SUN2000-100KTL-M2	SUN2000-100KTL-INM2
Rated input voltage	600 V (400 V) and 720 V (480 V)	600 V (380 V/400 V)	570 V (380 V), 600 V (400 V) and 720 V (480 V)	620 V (415 V) and 720 V (480 V)
Maximum short-circuit current (per MPPT)	40 A			
Maximum backfeed current to the PV array	0 A			
Number of inputs	20			
Number of MPP trackers	10			
Note a: The maximum input voltage is the upper threshold of the DC voltage. If the input voltage exceeds the threshold, the solar inverter may be damaged. Note b: If the input voltage is beyond the operating voltage range, the solar inverter cannot work properly.				

Output

Item	SUN2000-115KTL-M2	SUN2000-110KTL-M2	SUN2000-100KTL-M2	SUN2000-100KTL-INM2
Rated active power	115 kW	110 kW	100 kW	100 kW
Maximum apparent power	125 kVA	121 kVA	110 kVA	110 kVA
Maximum active power (cosϕ = 1)	125 kW	121 kW	110 kW	110 kW
Rated output voltage[a] (phase voltage/line voltage)	230 V/400 V and 277 V/480 V, 3 W + (N)[b] + PE	220 V/380 V and 230 V/400 V, 3 W + (N)[b] + PE	220 V/380 V, 230 V/400 V and 277 V/480 V, 3 W + (N)[b] + PE	240 V/415 V and 277 V/480 V, 3 W + (N)[b] + PE
Rated output current	166.0 A (400 V) and 138.4 A (480 V)	167.2 A (380 V) and 158.8 A (400 V)	152.0 A (380 V), 144.4 A (400 V) and 120.3 A (480 V)	139.2 A (415 V), 120.3 A (480 V)
Rated grid frequency	50 Hz/60 Hz			

 Copyright © Huawei Technologies Co., Ltd.

Item	SUN2000-115KTL-M2	SUN2000-110KTL-M2	SUN2000-100KTL-M2	SUN2000-100KTL-INM2
Maximum output current	182.3 A (400 V) and 151.9 A (480 V)	185.7 A (380 V) and 176.4 A (400 V)	168.8 A (380 V), 160.4 A (400 V) and 133.7 A (480 V)	154.6 A (415 V), 133.7 A (480 V)
Power factor	0.8 leading and 0.8 lagging			
Maximum total harmonic distortion (rated power)	< 3%			
Note a: The rated output voltage is determined by **Grid code**, which can be set on the SUN2000 app, SmartLogger, or NMS. Note b: You can determine whether to connect the neutral wire to the SUN2000-115KTL-M2, SUN2000-110KTL-M2, SUN2000-100KTL-M2, or SUN2000-100KTL-INM2 based on the application scenario. If no neutral wire is used, set **Output mode** to **Three-phase three-wire**. If the neutral wire is used, set the **Output mode** to **Three-phase four-wire**.				

Protection

Item	SUN2000-115KTL-M2	SUN2000-110KTL-M2	SUN2000-100KTL-M2	SUN2000-100KTL-INM2
AFCI	-	-	Supported	-
Input DC switch	Supported			
Anti-islanding protection	Supported			
Output overcurrent protection	Supported			
Input reverse connection protection	Supported			
PV string fault detection	Supported			
DC surge protection	Supported			

 Copyright © Huawei Technologies Co., Ltd.

Item	SUN2000-115KTL-M2	SUN2000-110KTL-M2	SUN2000-100KTL-M2	SUN2000-100KTL-INM2
AC surge protection	Supported			
Insulation resistance detection	Supported			
Residue current monitoring unit (RCMU)	Supported			
Overvoltage category	PV II/AC III			

Display and Communication

Item	SUN2000-115KTL-M2	SUN2000-110KTL-M2	SUN2000-100KTL-M2	SUN2000-100KTL-INM2
Display	LED indicators, WLAN module + app, Bluetooth module + app, USB data cable + app			
Communication	MBUS/RS485			

Common Parameters

Item	SUN2000-115KTL-M2	SUN2000-110KTL-M2	SUN2000-100KTL-M2	SUN2000-100KTL-INM2
Dimensions (W x H x D)	1035 mm×700 mm×365 mm			
Net weight	≤93 kg			
Operating temperature	–25°C to +60°C			
Cooling mode	Intelligent air cooling			
Highest operating altitude	4000 m			

 Copyright © Huawei Technologies Co., Ltd.

Item	SUN2000-115KTL-M2	SUN2000-110KTL-M2	SUN2000-100KTL-M2	SUN2000-100KTL-INM2
Relative humidity	0%–100% RH			
Input terminal	Amphenol Helios H4			
Output terminal	Crimping module + OT/DT terminal			
IP rating	IP66			
Topology	Transformerless			

 Copyright © Huawei Technologies Co., Ltd.

A Grid Codes

NOTE

The grid codes are subject to change. The listed codes are for reference only.

Set the correct grid code based on the application area and scenario of the inverter.

Grid Code	Description (Country/Region/Standard/Others)	SUN2000-115KTL-M2	SUN2000-110KTL-M2	SUN2000-100KTL-M2
VDE-AR-N-4105	Germany low-voltage power grid	Supported	-	Supported
NB/T 32004	China Golden Sun low-voltage power grid	-	Supported	Supported
UTE C 15-712-1(A)	France mainland power grid	Supported	-	Supported
UTE C 15-712-1(B)	France island power grid	Supported	-	Supported
UTE C 15-712-1(C)	France island power grid	Supported	-	Supported
VDE 0126-1-1-BU	Bulgaria power grid	Supported	-	Supported
VDE 0126-1-1-GR(A)	Greece mainland power grid	Supported	-	Supported
VDE 0126-1-1-GR(B)	Greece island power grid	Supported	-	Supported
BDEW-MV	Germany medium-voltage power grid	Supported	-	Supported

 Copyright © Huawei Technologies Co., Ltd.

Grid Code	Description (Country/Region/ Standard/Others)	SUN2000-115K TL-M2	SUN2000-110K TL-M2	SUN2000-100KTL -M2
G59-England	England 230 V power grid (I > 16 A)	Supported	-	Supported
G59-Scotland	Scotland 240 V power grid (I > 16 A)	Supported	-	Supported
G83-England	England 230 V power grid (I < 16 A)	Supported	-	Supported
G83-Scotland	Scotland 240 V power grid (I < 16 A)	Supported	-	Supported
CEI0-21	Italy power grid	Supported	-	Supported
EN50438-CZ	Czech Republic power grid	Supported	-	Supported
RD1699/661	Spain low-voltage power grid	Supported	-	Supported
RD1699/661-MV480	Spain medium-voltage power grid	Supported	-	Supported
EN50438-NL	Netherlands power grid	Supported	-	Supported
C10/11	Belgium power grid	Supported	-	Supported
AS4777	Australia power grid	Supported	-	Supported
IEC61727	IEC61727 low-voltage power grid (50 Hz)	Supported	-	Supported
Custom (50 Hz)	Reserved	Supported	Supported	Supported
Custom (60 Hz)	Reserved	Supported	Supported	Supported
CEI0-16	Italy power grid	Supported	-	Supported
CHINA-MV	China medium-voltage power grid	Supported	Supported	Supported
TAI-PEA	Thailand PEA power grid	Supported	-	Supported
TAI-MEA	Thailand MEA power grid	Supported	-	Supported

 Copyright © Huawei Technologies Co., Ltd.

Grid Code	Description (Country/Region/ Standard/Others)	SUN2000-115K TL-M2	SUN2000-110K TL-M2	SUN2000-100KTL -M2
BDEW-MV480	Germany medium-voltage power grid	Supported	-	Supported
Custom MV480 (50 Hz)	Reserved	Supported	-	Supported
Custom MV480 (60 Hz)	Reserved	Supported	-	Supported
G59-England-MV480	UK 480 V medium-voltage power grid (I > 16 A)	Supported	-	Supported
IEC61727-MV480	IEC61727 medium-voltage power grid (50 Hz)	Supported	-	Supported
UTE C 15-712-1-MV480	France island power grid	Supported	-	Supported
TAI-PEA-MV480	Thailand PEA medium-voltage power grid	Supported	-	Supported
TAI-MEA-MV480	Thailand MEA medium-voltage power grid	Supported	-	Supported
EN50438-DK-MV480	Denmark medium-voltage power grid	Supported	-	Supported
EN50438-TR-MV480	Turkey medium-voltage power grid	Supported	-	Supported
EN50438-TR	Turkey low-voltage power grid	Supported	-	Supported
C11/C10-MV480	Belgium medium-voltage power grid	Supported	-	Supported
Philippines	Philippines low-voltage power grid	Supported	-	Supported
Philippines-MV480	Philippines medium-voltage power grid	Supported	-	Supported
AS4777-MV480	Australia medium-voltage power grid	Supported	-	Supported
NRS-097-2-1	South Africa power grid	Supported	-	Supported

 Copyright © Huawei Technologies Co., Ltd.

Grid Code	Description (Country/Region/ Standard/Others)	SUN2000-115K TL-M2	SUN2000-110K TL-M2	SUN2000-100KTL -M2
NRS-097-2-1-MV480	South Africa medium-voltage power grid	Supported	-	Supported
KOREA	South Korea power grid	Supported	-	Supported
IEC61727-60Hz	IEC61727 low-voltage power grid (60 Hz)	Supported	-	Supported
IEC61727-60Hz-MV480	IEC61727 medium-voltage power grid (60 Hz)	Supported	-	Supported
CHINA_MV500	China medium-voltage power grid	-	-	-
ANRE	Romania low-voltage power grid	Supported	-	Supported
ANRE-MV480	Romania medium-voltage power grid	Supported	-	Supported
PO12.3-MV480	Spain medium-voltage power grid	Supported	-	Supported
EN50438_IE-MV480	Ireland medium-voltage power grid	Supported	-	Supported
EN50438_IE	Ireland low-voltage power grid	Supported	-	Supported
IEC61727-50Hz-MV500	India 500 V medium-voltage power grid	-	-	-
CEI0-16-MV480	Italy medium-voltage power grid	Supported	-	Supported
PO12.3	Spain low-voltage power grid	Supported	-	Supported
CEI0-21-MV480	Italy medium-voltage power grid	Supported	-	Supported
KOREA-MV480	South Korea medium-voltage power grid	Supported	-	Supported
Egypt ETEC	Egypt low-voltage power grid	Supported	-	Supported

 Copyright © Huawei Technologies Co., Ltd.

Grid Code	Description (Country/Region/ Standard/Others)	SUN2000-115K TL-M2	SUN2000-110K TL-M2	SUN2000-100KTL -M2
Egypt ETEC-MV480	Egypt medium-voltage power grid	Supported	-	Supported
EN50549-LV	Ireland power grid	Supported	-	Supported
EN50549-MV480	Ireland medium-voltage power grid	Supported	-	Supported
Jordan-Transmission	Jordan low-voltage power grid	Supported	-	Supported
Jordan-Transmission-MV480	Jordan medium-voltage power grid	Supported	-	Supported
NAMIBIA	Namibia power grid	Supported	-	Supported
ABNT NBR 16149	Brazil power grid	Supported	-	Supported
ABNT NBR 16149-MV480	Brazil medium-voltage power grid	Supported	-	Supported
INDIA	India low-voltage power grid	-	-	-
INDIA-MV500	India medium-voltage power grid	-	-	-
SA_RPPs	South Africa low-voltage power grid	Supported	-	Supported
SA_RPPs-MV480	South Africa medium-voltage power grid	Supported	-	Supported
ZAMBIA	Zambia low-voltage power grid	Supported	-	Supported
ZAMBIA-MV480	Zambia medium-voltage power grid	Supported	-	Supported
Chile	Chile low-voltage power grid	Supported	-	Supported
Chile-MV480	Chile medium-voltage power grid	Supported	-	Supported
Mexico-MV480	Mexico medium-voltage power grid	Supported	-	Supported
Malaysian	Malaysia low-voltage power grid	Supported	-	Supported

 Copyright © Huawei Technologies Co., Ltd.

Grid Code	Description (Country/Region/ Standard/Others)	SUN2000-115K TL-M2	SUN2000-110K TL-M2	SUN2000-100KTL -M2
Malaysian-MV480	Malaysia medium-voltage power grid	Supported	-	Supported
KENYA_ETHIOPIA	Kenya low-voltage power grid and Ethiopia power grid	Supported	-	Supported
KENYA_ETHIOPIA-MV480	Kenya low-voltage power grid and Ethiopia medium-voltage power grid	Supported	-	Supported
NIGERIA	Nigeria low-voltage power grid	Supported	-	Supported
NIGERIA-MV480	Nigeria medium-voltage power grid	Supported	-	Supported
DUBAI	Dubai low-voltage power grid	Supported	-	Supported
DUBAI-MV480	Dubai medium-voltage power grid	Supported	-	Supported
Northern Ireland	Northern Ireland low-voltage power grid	Supported	-	Supported
Northern Ireland-MV480	Northern Ireland medium-voltage power grid	Supported	-	Supported
Cameroon	Cameroon low-voltage power grid	Supported	-	Supported
Cameroon-MV480	Cameroon medium-voltage power grid	Supported	-	Supported
Jordan-Distribution	Jordan power distribution network low-voltage power grid	Supported	-	Supported
Jordan-Distribution-MV480	Jordan power distribution network medium-voltage power grid	Supported	-	Supported
NAMIBIA_MV480	Namibia power grid	Supported	-	Supported

 Copyright © Huawei Technologies Co., Ltd.

Grid Code	Description (Country/Region/ Standard/Others)	SUN2000-115K TL-M2	SUN2000-110K TL-M2	SUN2000-100KTL -M2
LEBANON	Lebanon low-voltage power grid	Supported	-	Supported
LEBANON-MV480	Lebanon medium-voltage power grid	Supported	-	Supported
ARGENTINA-MV500	Argentina medium-voltage power grid	Supported	-	Supported
Jordan-Transmission-HV	Jordan high-voltage power grid	Supported	-	Supported
Jordan-Transmission-HV480	Jordan high-voltage power grid	Supported	-	Supported
TUNISIA	Tunisia power grid	Supported	-	Supported
TUNISIA-MV480	Tunisia medium-voltage power grid	Supported	-	Supported
AUSTRALIA-NER	Australia NER standard power grid	Supported	-	Supported
AUSTRALIA-NER-MV480	Australia NER standard power grid	Supported	-	Supported
SAUDI	Saudi Arabia power grid	Supported	-	Supported
SAUDI-MV480	Saudi Arabia power grid	Supported	-	Supported
Ghana-MV480	Ghana medium-voltage power grid	Supported	-	Supported
Israel	Israel power grid	Supported	-	Supported
Israel-MV480	Israel power grid	Supported	-	Supported
Chile-PMGD	Chile PMGD power grid	Supported	-	Supported
Chile-PMGD-MV480	Chile PMGD power grid	Supported	-	Supported
VDE-AR-N4120_HV	VDE4120 standard power grid	Supported	-	Supported
VDE-AR-N4120_HV480	VDE4120 standard power grid	Supported	-	Supported

 Copyright © Huawei Technologies Co., Ltd.

Grid Code	Description (Country/Region/ Standard/Others)	SUN2000-115K TL-M2	SUN2000-110K TL-M2	SUN2000-100KTL -M2
Vietnam	Vietnam power grid	Supported	-	Supported
Vietnam-MV480	Vietnam power grid	Supported	-	Supported
TAIPOWER	Taiwan Power low-voltage power grid	Supported	-	Supported
TAIPOWER-MV480	Taiwan Power medium-voltage power grid	Supported	-	Supported
ARGENTINA-MV480	Argentina medium-voltage power grid	Supported	-	Supported
OMAN	Oman low-voltage power grid	Supported	-	Supported
OMAN-MV480	Oman medium-voltage power grid	Supported	-	Supported
KUWAIT	Kuwait low-voltage power grid	Supported	-	Supported
KUWAIT-MV480	Kuwait medium-voltage power grid	Supported	-	Supported
BANGLADESH	Bangladesh low-voltage power grid	Supported	-	Supported
BANGLADESH-MV480	Bangladesh medium-voltage power grid	Supported	-	Supported
Chile-Net_Billing	Chile Net Billing power grid	Supported	-	Supported
EN50438-NL-MV480	Netherlands medium-voltage power grid	Supported	-	Supported
BAHRAIN	Bahrain low-voltage power grid	Supported	-	Supported
BAHRAIN-MV480	Bahrain medium-voltage power grid	Supported	-	Supported
Fuel_Engine_Grid	Diesel generator hybrid power grid	Supported	Supported	Supported

 Copyright © Huawei Technologies Co., Ltd.

Grid Code	Description (Country/Region/ Standard/Others)	SUN2000-115K TL-M2	SUN2000-110K TL-M2	SUN2000-100KTL -M2
Fuel-Engine-Grid-60Hz	Diesel generator hybrid power grid	Supported	Supported	Supported
ARGENTINA	Argentina power grid	Supported	-	Supported
Mauritius	Mauritius power grid	Supported	-	Supported
Mauritius-MV480	Mauritius medium-voltage power grid	Supported	-	Supported
EN50438-SE	Sweden low-voltage power grid	Supported	-	Supported
Pakistan	Pakistan power grid	Supported	-	Supported
Pakistan-MV480	Pakistan medium-voltage power grid	Supported	-	Supported
Austria	Austria power grid	Supported	-	Supported
Austria-MV480	Austria medium-voltage power grid	Supported	-	Supported
G99-TYPEA-LV	UK G99_TypeA_LV power grid	Supported	-	Supported
G99-TYPEB-LV	UK G99_TypeB_LV power grid	Supported	-	Supported
G99-TYPEB-HV	UK G99_TypeB_HV power grid	Supported	-	Supported
G99-TYPEB-HV-MV480	UK G99_TypeB_HV medium-voltage power grid	Supported	-	Supported
G99-TYPEA-HV	UK G99_TypeA_HV power grid	Supported	-	Supported
EN50549-MV400	Ireland power grid	Supported	-	Supported
VDE-AR-N4110	Germany medium-voltage power grid	Supported	-	Supported
VDE-AR-N4110-MV480	Germany medium-voltage power grid	Supported	-	Supported
NTS	Spain power grid	Supported	-	Supported

 Copyright © Huawei Technologies Co., Ltd.

Grid Code	Description (Country/Region/ Standard/Others)	SUN2000-115K TL-M2	SUN2000-110K TL-M2	SUN2000-100KTL -M2
NTS-MV480	Spain medium-voltage power grid	Supported	-	Supported
SINGAPORE	Singapore low-voltage power grid	Supported	-	Supported
SINGAPORE-MV480	Singapore medium-voltage power grid	Supported	-	Supported
HONGKONG	Hong Kong low-voltage power grid	Supported	-	Supported
HONGKONG-MV480	Hong Kong medium-voltage power grid	Supported	-	Supported
C10/11-MV400	Belgium medium-voltage power grid	Supported	-	Supported
CEA	India CEA low-voltage power grid	-	-	-
CEA-MV480	India CEA medium-voltage power grid	-	-	-
Cambodia	Cambodia power grid	Supported	-	Supported
Cambodia-MV480	Cambodia medium-voltage power grid	Supported	-	Supported
EN50549-SE	Sweden low-voltage power grid	Supported	-	Supported
GREG030	Colombia low-voltage power grid	Supported	-	Supported
GREG030-MV440	Colombia medium-voltage power grid	Supported	-	Supported
GREG030-MV480	Colombia medium-voltage power grid	Supported	-	Supported
PORTUGAL	Portugal low-voltage power grid	Supported	-	Supported
PORTUGAL-MV480	Portugal medium-voltage power grid	Supported	-	Supported

 Copyright © Huawei Technologies Co., Ltd.

Grid Code	Description (Country/Region/ Standard/Others)	SUN2000-115K TL-M2	SUN2000-110K TL-M2	SUN2000-100KTL -M2
AS4777_ACT	Australia power grid	Supported	-	Supported
AS4777_NSW_ESS	Australia power grid	Supported	-	Supported
AS4777_NSW_AG	Australia power grid	Supported	-	Supported
AS4777_QLD	Australia power grid	Supported	-	Supported
AS4777_SA	Australia power grid	Supported	-	Supported
AS4777_VIC	Australia power grid	Supported	-	Supported
EN50549-PL	Poland power grid	Supported	-	Supported
DENMARK-EN50549-DK1-LV230	Denmark power grid	Supported	-	Supported
DENMARK-EN50549-DK2-LV230	Denmark power grid	Supported	-	Supported
AUSTRALIA-AS4777_A-LV230	Australia power grid	Supported	-	Supported
AUSTRALIA-AS4777_B-LV230	Australia power grid	Supported	-	Supported
AUSTRALIA-AS4777_C-LV230	Australia power grid	Supported	-	Supported
AUSTRALIA-AS4777_NZ-LV230	Australia power grid	Supported	-	Supported
INVALID GRID CODE	Invalid grid code	Supported	-	Supported

 Copyright © Huawei Technologies Co., Ltd.

B Resetting Password

Step 1 Check that the AC and DC sides of the inverter are both powered on, and indicators and are steady green or blinking slowly for more than 3 minutes.

Step 2 Turn off the AC switch, set the DC SWITCH at the bottom of the inverter to OFF, and wait until all LED indicators on the inverter panel turn off.

Step 3 Complete the following operations within 4 minutes:

1. Turn on the AC switch and wait for about 90s or until the inverter indicator blinks.
2. Turn off the AC switch and wait about 30s or until all LED indicators on the inverter panel turn off.
3. Turn on the AC switch and wait for about 90s or until the inverter indicator blinks.

Step 4 Log in to the app and reset the password within 10 minutes. (If no operation is performed within 10 minutes, all parameters of the inverter remain unchanged.)

----End

NOTICE

You are advised to reset the password in the morning or at night when the solar irradiance is low.

 Copyright © Huawei Technologies Co., Ltd.

C Domain name of the management system

NOTE

The list is subject to change.

Table C-1 Domain names of management systems

Domain Name	Data Type	Scenario
intl.fusionsolar.huawei.com	Public IP address	FusionSolar hosting cloud **NOTE** The domain name is compatible with cn.fusionsolar.huawei.com (Chinese mainland).

 Copyright © Huawei Technologies Co., Ltd.

D Acronyms and Abbreviations

L

LED	light emitting diode

M

MBUS	monitoring bus
MPP	maximum power point
MPPT	maximum power point tracking

P

PV	photovoltaic

R

RCMU	residual current monitoring unit

 Copyright © Huawei Technologies Co., Ltd.