FusionSolar
Smart String ESS Solution

SOLAR.HUAWEI.COM

HUAWEI

HUAWEI

About Huawei

Huawei is a leading global provider of information and communications technology (ICT) infrastructure and smart devices. With integrated solutions across four key domains – telecom networks, IT, smart devices, and cloud services – we are committed to bringing digital to every person, home and organization for a fully connected, intelligent world. Huawei's end-to-end portfolio of products, solutions and services are both competitive and secure. Through open collaboration with ecosystem partners, we create lasting value for our customers, working to empower people, enrich home life, and inspire innovation in organizations of all shapes and sizes. At Huawei, innovation focuses on customer needs. We invest heavily in basic research, concentrating on technological breakthroughs that drive the world forward.

Employees
195,000+

R&D Personnel
107,000+

Countries
170+

Brand Finance Global 500
9

Fortune Global 500
44

R&D Investment
2

FusionSolar Smart String ESS Solution

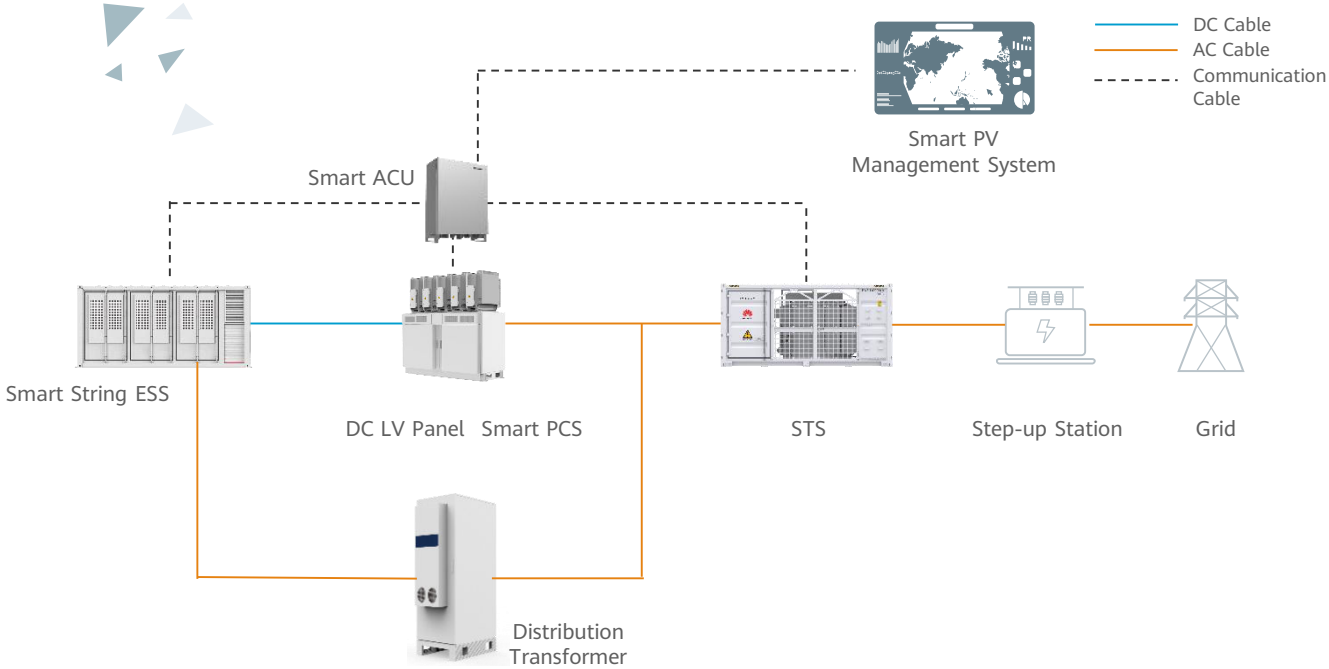

More Energy	Optimal Design	Simple O&M	Safe & Reliable
Pack-level Optimization	Support battery augmentation	No periodic balancing	Modular Design
Rack-level Optimization	Reducing Initial configuration	No experts site visit	High Availability

LUNA2000-2.0MWH-1H0/1H1/2H1
Smart String ESS

More Energy | **Optimal Investment** | **Simple O&M** | **Safe & Reliable**

Battery Container			
Model	LUNA2000-2.0MWH-1H0	LUNA2000-2.0MWH-1H1	LUNA2000-2.0MWH-2H1
DC Rated Voltage	1,200 V	1,250 V	1,250 V
DC Max. Voltage	1,500 V	1,500 V	1,500 V
Nominal Energy Capacity	2,064 kWh	2,032 kWh	2,032 kWh
Supported Charge & Discharge Rate	≤ 1 C	≤ 1 C	≤ 0.5 C
Rated Power	344 kW * 6	338.7 kW * 6	338.7 kW * 3
Container Configuration (W x H x D)	6,058 x 2,896 x 2,438 mm	6,058 x 2,896 x 2,438 mm	6,058 x 2,896 x 2,438 mm
Container Weight	≤ 30 t	≤ 30 t	≤ 30 t
Operation Temperature Range	-30°C ~ 55°C	-30°C ~ 55°C	-30°C ~ 55°C
Storage Temperature Range	-40°C ~ 60°C	-40°C ~ 60°C	-40°C ~ 60°C
Operation Humidity Range	0 ~ 100% (Without Condensation)	0 ~ 100% (Without Condensation)	0 ~ 100% (Without Condensation)
Max. Operating Altitude	4,000 m	4,000 m	4,000 m
Cooling Method	Smart Air Cooling	Smart Air Cooling	Smart Air Cooling
Configuration of HVAC	8 HVACs	8 HVACs	6 HVACs
Fire Suppression Agent	FM-200 / Novec 1230™	FM-200 / Novec 1230™	FM-200 / Novec 1230™
Communication Interface	Ethernet / SFP	Ethernet / SFP	Ethernet / SFP
Communication Protocol	Modbus TCP / IEC104	Modbus TCP / IEC104	Modbus TCP / IEC104
Protection Degree	IP55	IP55	IP55
Certificates (more available upon request)			
Environment	RoHS6		
Safety & Electrical	IEC62477-1, IEC62040-1, IEC61000-6-2, EN55011, UL9540A, IEC62619, UN3536, etc.		

LUNA2000-1.0MWH-1H1 (Preliminary)
Smart String ESS

More Energy | **Optimal Investment** | **Simple O&M** | **Safe & Reliable**

Battery Container	
Model	LUNA2000-1.0MWH-1H1
DC Rated Voltage	1,250 V
DC Max. Voltage	1,500 V
Nominal Energy Capacity	1,016 kWh
Supported Charge & Discharge Rate	≤ 1 C
Rated Power	344 kW * 3
Container Configuration (W x H x D)	6,058 x 2,896 x 2,438 mm
Container Weight	≤ 20 t
Operation Temperature Range	-30°C ~ 55°C
Storage Temperature Range	-40°C ~ 60°C
Operation Humidity Range	0 ~ 100% (Without Condensation)
Max. Operating Altitude	4,000 m
Cooling Method	Smart Air Cooling
Configuration of HVAC	3 HVACs
Fire Suppression Agent	FM-200 / Novec 1230™
Communication Interface	Ethernet / SFP
Communication Protocol	Modbus TCP / IEC104
Protection Degree	IP55
Certificates (more available upon request)	
Environment	RoHS6
Safety & Electrical	IEC62477-1, IEC62040-1, IEC61000-6-2, EN55011, UL9540A, IEC62619, UN3536, etc.

Smart String ESS

Battery Pack & Smart Rack Controller

Battery Pack

General			
Model	LUNA2000-2.0MWH-1H0	LUNA2000-2.0MWH-1H1 LUNA2000-1.0MWH-1H1(Preliminary)	LUNA2000-2.0MWH-2H1
Cell Material	LFP	LFP	LFP
Pack Configuration	16S 1P	18S 1P	18S 1P
Rated Voltage	51.2 V	57.6 V	57.6 V
Nominal Capacity	320 Ah / 16.38 kWh	280 Ah / 16.13 kWh	280 Ah / 16.13 kWh
Supported Charge & Discharge Rate	≤ 1 C	≤ 1 C	≤ 0.5 C
Weight	≤ 140 kg	≤ 140 kg	≤ 140 kg
Dimensions (W x H x D)	442 x 307 x 660 mm	442 x 307 x 660 mm	442 x 307 x 660 mm

Smart Rack Controller

Efficiency			
Model	LUNA2000-2.0MWH-1H0	LUNA2000-2.0MWH-1H1 LUNA2000-1.0MWH-1H1	LUNA2000-2.0MWH-2H1
Max. Efficiency	99.0%	99.0%	99.0%
Battery Side			
Rated Voltage	1,075.2 V	1,209.6 V	1,209.6 V
Operating Voltage Range	40 V ~ 1,400 V	40 V ~ 1,400 V	40 V ~ 1,400 V
Rated Power Voltage Range	1,075 V ~ 1,320 V	1,075 V ~ 1,320 V	1,075 V ~ 1,320 V
Min. Start Voltage	350 V	350 V	350 V
Bus Side			
Max. DC Voltage	1,500 V	1,500 V	1,500 V
Rated Voltage	1,200 V	1,250 V	1,250 V
Rated Current	286.7 A	275.2 A	275.2 A
Rated Power	344,000 W	344,000 W	344,000 W
General			
Dimensions (W x H x D)	600 x 270 x 820 mm	600 x 270 x 820 mm	600 x 270 x 820 mm
Weight	≤ 90 kg	≤ 90 kg	≤ 90 kg
Cooling Method	Smart Air Cooling	Smart Air Cooling	Smart Air Cooling
Protection Degree	IP66	IP66	IP66

LUNA2000-200KTL-H0
Smart PCS

Max. Efficiency 99%

Modular Design

IP66 Protection

Surge Arresters for DC & AC

Ethernet Communication

Smart Grid Algorithm

Efficiency Curve

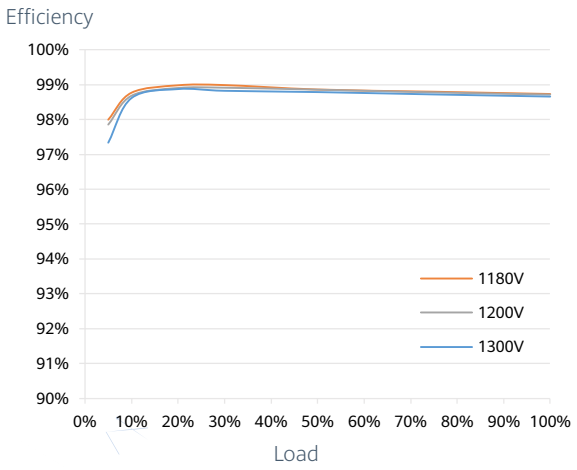

Circuit Diagram

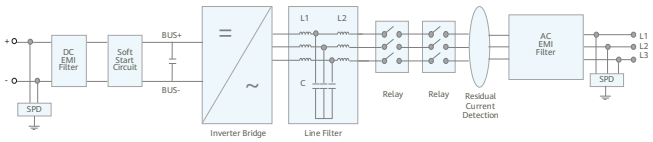

LUNA2000-200KTL-H0

LUNA2000-200KTL-H0
Technical Specifications

Efficiency	
Max. Efficiency	99.0%
DC Side	
Rated DC Voltage	1,180 V
Max. DC Voltage	1,500 V
Operating DC Voltage Range	1,180 V ~ 1,500 V
Max. DC Current	207.6 A
Max. Number of Inputs	1
AC Side	
Rated AC Active Power	200,000 W @40°C
Rated AC Voltage	800 V
Rated AC Grid Frequency	50 Hz / 60 Hz
Max. AC Current	173.2 A
Adjustable Power Factor Range	-1 ... +1
Max. Total Harmonic Distortion	< 3%
Protection	
Anti-islanding Protection	Yes
AC Overcurrent Protection	Yes
DC Reverse-polarity Protection	Yes
Insulation Resistance Detection	Yes
Residual Current Protection	Yes
DC Surge Protection[1]	Type II
AC Surge Protection[1]	Type II
Communication	
Display	LED Indicators, WLAN + APP
USB	Yes
Ethernet	Yes
General	
Dimensions (W x H x D)	875 x 820 x 365 mm
Weight	< 95 kg
Operating Temperature Range	-25°C ~ 60°C
Cooling Method	Smart Air Cooling
Max. Operating Altitude without Derating	4,000 m
Relative Humidity	0 ~ 100%
DC Connector	OT/DT Terminal
AC Connector	OT/DT Terminal
Protection Degree	IP66
Topology	Transformerless

1: Compatible Type II protection class according to IEC / EN 61643-11

DCBOX-9/5-H0
DC LV Panel

Electrical	
Max. Input Voltage	1,500 V
Nominal Input Voltage	1,200 V
Max. Branch Current for Battery Rack Side	321 A
Max. Branch Current for PCS Side	193 A
Number of DC Circuit Breaker	14
Max. Input Number of Battery Rack	9
Max. Input Number of PCS	5
Max. Convergence Capacity	5 x 193 A
Protection	
DC Overcurrent Protection	Yes
Environment	
Operating Temperature Range	-30°C ~ 60°C
Relative Humidity	0 ~ 100%
Max. Operating Altitude	4,000 m
General	
Cable Entries	Top in for PCS & Bottom in for Battery Rack
Dimensions (W x H x D)	2,040 x 1,415 x 975 mm
Weight (Without Smart PCS)	≤ 750 kg
DC Connector / AC Connector	OT Terminal
Protection Degree	IP55
Installation Options	Grounding

DTS-200K-D0
Distribution Transformer

Electrical	
AC Power	210 kVA@ 400 Vac / 4 kVA@ 110 Vac
Rated Input Voltage	800 Vac
Max. Input Current at Nominal Voltage	151.6 A
Rated Output Voltage	400V (3P) /110V (1P)
Rated Frequency	50 / 60 Hz
Transformer Type	Dry Type
Transformer Cooling Type	AF
Transformer Vectoring Group	Dyn11yn11
Transformer Tappings	± 2 x 2.5%
Transformer Winding	Al
Transformer Insulation Class	H
Transformer Impedance (at 145°C)	4% (±10%) @50Hz / 4.8% (±10%) @60Hz
Transformer No-load Loss	≤ 500 W (+15%)
Transformer Load Loss	≤ 3,044 W (+15%)
Cablings	
Number of outputs	Five MCCBs, each connected to two outputs
Cabling mode	Routed in and out from the bottom
Protection	
Protection Degree	IP 55
LV SPD	Type II
Transformer Protection	Transformer Temperature Protection
Environment	
Operating Temperature Range	- 25℃ ~ 55℃ (-13°F ~ 131°F)
Relative Humidity	0% ~ 95%
Max. Operating Altitude	4,000 m
General	
Dimensions (W x H x D)	900 x 2,100 x 1,200 mm
Weight	< 1.3 t
Communication Mode	Dry Contacts
Cooling Type	Smart Cooling without Air-across for Higher Availability
Applicable Standards	IEC 60076, IEC 61439

JUPITER-9000K-H0(Preliminary)
Smart Transformer Station

Simple

Prefabricated and Pre-tested, No Internal Cabling Needed Onsite
Compact 20' HC Container Design for Easy Transportation

Efficient

High Efficiency Transformer for Higher Yields
Lower Self-consumption for Higher Yields

Smart

Real-time Monitoring of Transformer, LV Panel and RMU
High Precision Sensor of LV Electricity Parameters
Remote Control of ACB and MV Circuit Breaker

Reliable

Robust Design against Harsh Environments
Optimal Cooling Design for High Availability and Easy O&M
Comprehensive Tests from Components, Device to Solution

Schematic Diagram

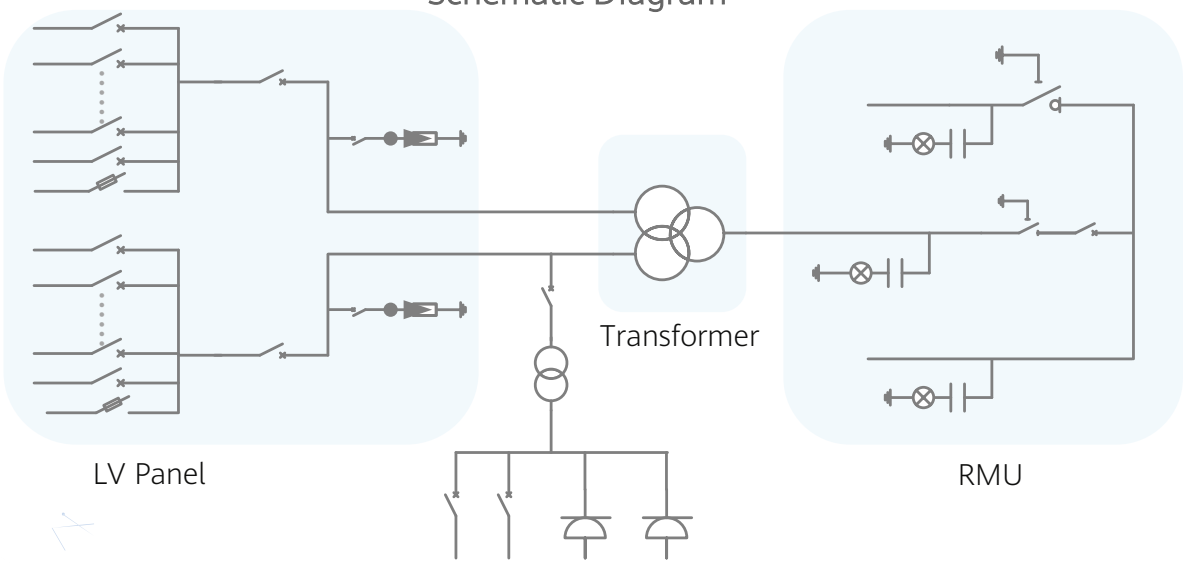

JUPITER-9000K-H0

Technical Specifications(Preliminary)

Input		
Available Inverters	SUN2000-200KTL / SUN2000-215KTL / SUN2000-185KTL / LUNA2000-200KTL	
Max. LV AC Inputs	44	
AC Power	9,000 kVA @40℃ / 8,250 kVA @50℃ [1]	
Rated Input Voltage	800 V	
LV Main Inputs	ACB (4000 A / 800 V / 3P, 2 x 1 pcs), MCCB (250 A / 800 V / 3P, 2 x 22 pcs)	
Output		
Rated Output Voltage	22 kV, 30 kV, 33 kV [2]	34.5 kV [2]
Frequency	50 Hz	50 Hz
Transformer Type	Oil-immersed, Conservator Type	
Transformer Cooling Type	ONAN	
Transformer Tappings	± 2 x 2.5%	
Transformer Oil Type	Mineral Oil (PCB Free)	
Transformer Vector Group	Dy11-y11	
Transformer Min. Peak Efficiency Index	Tier 1 or Tier 2 In Accordance with EN 50588-1	
RMU Type	SF_6 Gas Insulated	
RMU Transformer Protection Units	MV Vacuum Circuit Breaker Units	
RMU Cable Incoming / Outgoing Units	Direct Cable Unit or Cable Load Break Switch Unit	
Auxiliary Transformer	Dry Type Transformer, 3 kVA, li0	
Output Voltage of Auxiliary Transformer	400 / 230 Vac or 220 / 127 Vac	
Protection		
Transformer Monitoring & Protection	Oil Level, Oil Temperature, Oil Pressure and Buchholz	
Protection Degree of MV & LV Room	IP 54	
Internal Arcing Fault of STS	IAC A 20 kA 1s	
MV Relay Protection	50/51, 50N/51N	
LV Overvoltage Protection	Type I+II	
Anti-rodent Protection	C5 Medium in accordance with ISO 12944	
Features		
2 kVA UPS	Optional [3]	
MV Surge Arrester for MV VCB	Optional [3]	
General		
Dimensions (W x H x D)	6,058 x 2,896 x 2,438 mm (20' HC Container)	
Weight	< 28 t	
Operating Temperature Range	-25℃ ~ 60℃ [4] (-13°F ~ 140°F)	
Relative Humidity	0% ~ 95%	
Max. Operating Altitude	2,000 m [5]	2,500 m [5]
MV-LV AC Connections	Prewired and Pretested, No Internal Cabling Onsite	
LV & MV Room Cooling	Smart Cooling without Air-across for Higher Availability	
Communication	Modbus TCP, Preconfigured with SmartACU2000D	
Applicable Standards	IEC 62271-202, EN 50588-1, IEC 60076, IEC 62271-200, IEC 61439-1	

1 - More detailed AC power of STS, please refer to the de-rating curve.
2 - Rated output voltage from 10 kV to 35 kV, more available upon request
3 - Extra expense needed for optional features which standard product doesn't contain, more options upon request.
4 -When ambient temperature ≥55℃, awning shall be equipped for STS on site by customer.
5- For higher operating altitude, pls consult with Huawei.

STS-6000K-H1
Smart Transformer Station

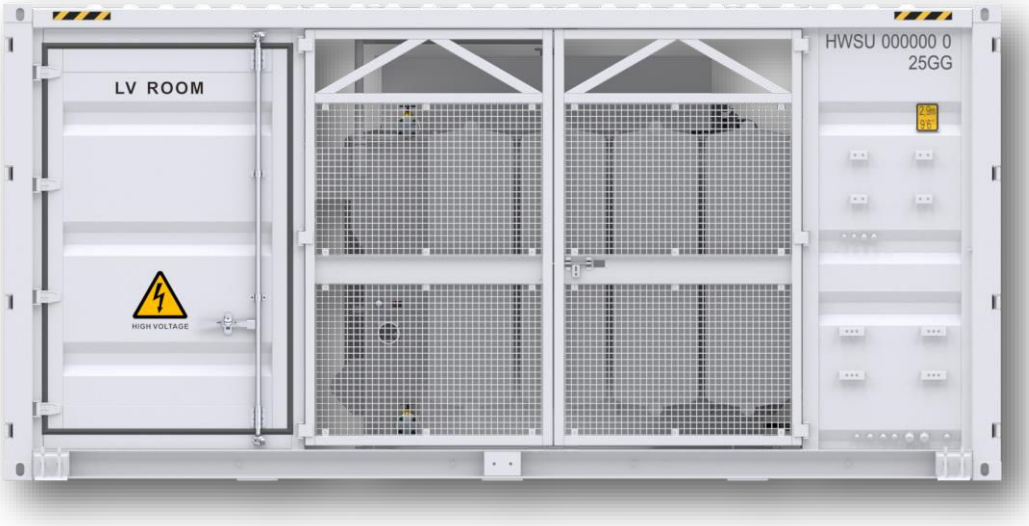

Simple

Prefabricated and Pre-tested, No Internal Cabling Needed Onsite
Compact 20' HC Container Design for Easy Transportation

Efficient

High Efficiency Transformer for Higher Yields
Lower Self-consumption for Higher Yields

Smart

Real-time Monitoring of Transformer, LV Panel and RMU
High Precision Sensor of LV Electricity Parameters
Remote Control of ACB and MV Circuit Breaker

Reliable

Robust Design against Harsh Environments
Optimal Cooling Design for High Availability and Easy O&M
Comprehensive Tests from Components, Device to Solution

Schematic Diagram

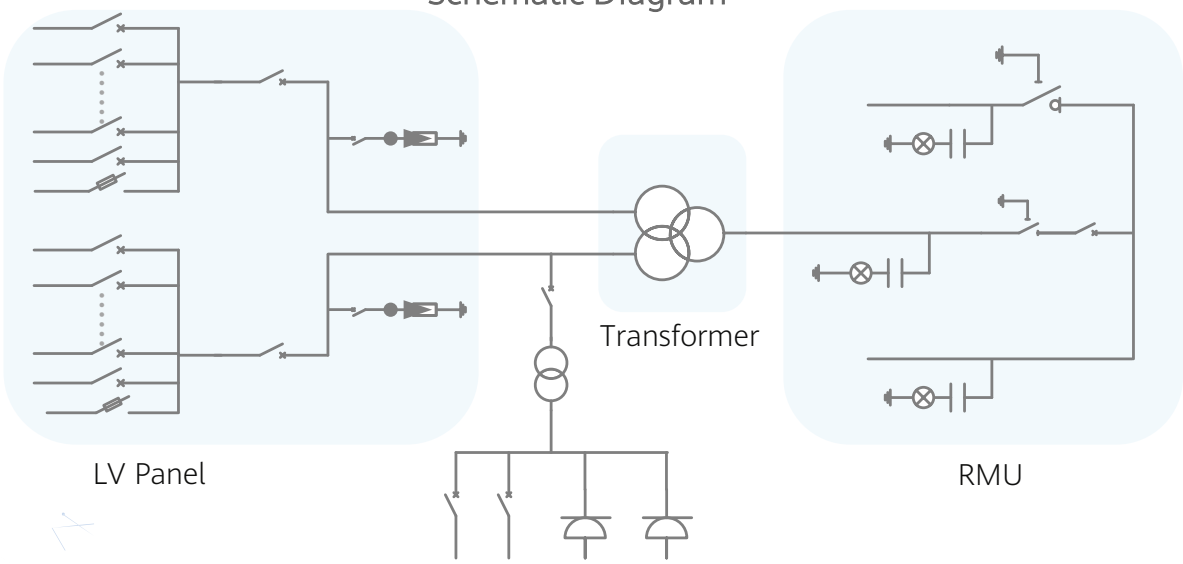

STS-6000K-H1

Technical Specifications

Input		
Available Inverters / PCS	SUN2000-200KTL / SUN2000-215KTL / SUN2000-185KTL / LUNA2000-200KTL	
Maximum LV AC Inputs	34	
AC Power	6,800 kVA @40℃ [1]	
Rated Input Voltage	800 V	
LV Main Switches	ACB (2900 A / 800 V / 3P, 2 x 1 pcs), MCCB (250 A / 800 V / 3P, 2 x 17 pcs)	
Output		
Rated Output Voltage	11 kV, 15 kV, 20 kV, 22 kV, 30 kV, 33 kV, 35 kV [2]	13.8 kV, 34.5 kV [2]
Frequency	50 Hz	60 Hz
Transformer Type	Oil-immersed, Conservator Type	
Transformer Cooling Type	ONAN	
Transformer Tappings	± 2 x 2.5%	
Transformer Oil Type	Mineral Oil (PCB Free)	
Transformer Vector Group	Dy11-y11	
Transformer Min. Peak Efficiency Index	Tier 1 or Tier 2 In Accordance with EN 50588-1	
RMU Type	SF_6 Gas Insulated	
RMU Transformer Protection Units	MV Vacuum Circuit Breaker Units	
RMU Cable Incoming / Outgoing Units	Direct Cable Unit or Cable Load Break Switch Unit	
Auxiliary Transformer	Dry Type Transformer, 5 kVA, Dyn11	
Output Voltage of Auxiliary Transformer	400 / 230 Vac or 220 / 127 Vac	
Protection		
Transformer Monitoring & Protection	Oil Level, Oil Temperature, Oil Pressure and Buchholz	
Protection Degree of MV & LV Room	IP 54	
Internal Arcing Fault Classification of STS	IAC A 20 kA 1s	
MV Relay Protection	50/51, 50N/51N	
LV Overvoltage Protection	Type I+II	
Anti-rodent Protection	C5 Medium in accordance with ISO 12944	
Features		
2 kVA UPS	Optional [3]	
MV Surge Arrester for MV VCB	Optional [3]	
General		
Dimensions (W x H x D)	6,058 x 2,896 x 2,438 mm (20' HC Container)	
Weight	< 22 t	
Operating Temperature Range	-25℃ ~ 60℃ [4] (-13°F ~ 140°F)	
Relative Humidity	0% ~ 95%	
Max. Operating Altitude	1,000 m [5]	1,500 m [5]
MV-LV AC Connections	Prewired and Pretested, No Internal Cabling Onsite	
LV & MV Room Cooling	Smart Cooling without Air-across for Higher Availability	
Communication	Modbus-RTU, Preconfigured with Smartlogger3000B	
Applicable Standards	IEC 62271-202, EN 50588-1, IEC 60076, IEC 62271-200, IEC 61439-1	

1 - More detailed AC power of STS, please refer to the de-rating curve.
2 - Rated output voltage from 10 kV to 35 kV, more available upon request
3 - Extra expense needed for optional features which standard product doesn't contain, more options upon request.
4 -When ambient temperature ≥55℃, awning shall be equipped for STS on site by customer.
5- For higher operating altitude, pls consult with Huawei.

STS-3000K-H1
Smart Transformer Station

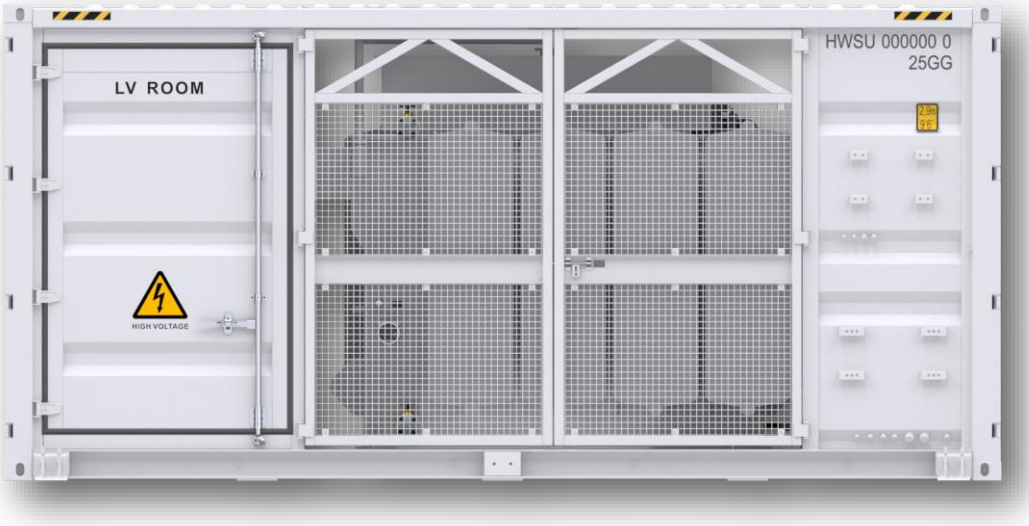

Simple

Prefabricated and Pre-tested, No Internal Cabling Needed Onsite
Compact 20' HC Container Design for Easy Transportation

Efficient

High Efficiency Transformer for Higher Yields
Lower Self-consumption for Higher Yields

Smart

Real-time Monitoring of Transformer, LV Panel and RMU
High Precision Sensor of LV Electricity Parameters
Remote Control of ACB and MV Circuit Breaker

Reliable

Robust Design against Harsh Environments
Optimal Cooling Design for High Availability and Easy O&M
Comprehensive Tests from Components, Device to Solution

Schematic Diagram

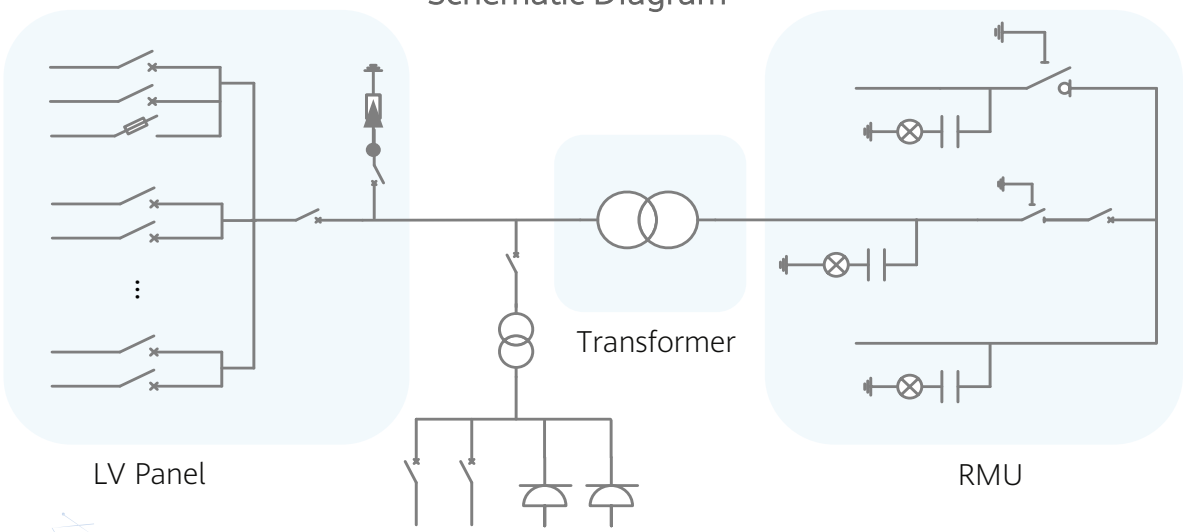

STS-3000K-H1

Technical Specifications

Input		
Available Inverters / PCS	SUN2000-200KTL / SUN2000-215KTL / SUN2000-185KTL / LUNA2000-200KTL	
Maximum LV AC Inputs	17	
AC Power	3,400 kVA @40℃ [1]	
Rated Input Voltage	800 V	
LV Main Switches	ACB (2900 A / 800 V / 3P, 1 pcs), MCCB (250 A / 800 V / 3P, 17 pcs)	
Output		
Rated Output Voltage	11 kV, 15 kV, 20 kV, 22 kV, 30 kV, 33 kV, 35 kV [2]	13.8 kV, 34.5 kV [2]
Frequency	50 Hz	60 Hz
Transformer Type	Oil-immersed, Conservator Type	
Transformer Cooling Type	ONAN	
Transformer Tappings	± 2 x 2.5%	
Transformer Oil Type	Mineral Oil (PCB Free)	
Transformer Vector Group	Dy11	
Transformer Min. Peak Efficiency Index	Tier 1 or Tier 2 In Accordance with EN 50588-1	
RMU Type	SF_6 Gas Insulated	
RMU Transformer Protection Units	MV Vacuum Circuit Breaker Units	
RMU Cable Incoming / Outgoing Units	Direct Cable Unit or Cable Load Break Switch Unit	
Auxiliary Transformer	Dry Type Transformer, 5 kVA, Dyn11	
Output Voltage of Auxiliary Transformer	400 / 230 Vac or 220 / 127 Vac	
Protection		
Transformer Monitoring & Protection	Oil Level, Oil Temperature, Oil Pressure and Buchholz	
Protection Degree of MV & LV Room	IP 54	
Internal Arcing Fault Classification of STS	IAC A 20 kA 1s	
MV Relay Protection	50/51, 50N/51N	
LV Overvoltage Protection	Type I+II	
Anti-rodent Protection	C5 Medium in accordance with ISO 12944	
Features		
2 kVA UPS	Optional [3]	
MV Surge Arrester for MV VCB	Optional [3]	
General		
Dimensions (W x H x D)	6,058 x 2,896 x 2,438 mm (20' HC Container)	
Weight	< 15 t	
Operating Temperature Range	-25℃ ~ 60℃ [4] (-13°F ~ 140°F)	
Relative Humidity	0% ~ 95%	
Max. Operating Altitude	1,000 m [5]	1,500 m [5]
MV-LV AC Connections	Prewired and Pretested, No Internal Cabling Onsite	
LV & MV Room Cooling	Smart Cooling without Air-across for Higher Availability	
Communication	Modbus-RTU, Preconfigured with Smartlogger3000B	
Applicable Standards	IEC 62271-202, EN 50588-1, IEC 60076, IEC 62271-200, IEC 61439-1	

1 - More detailed AC power of STS, please refer to the de-rating curve.
2 - Rated output voltage from 10 kV to 35 kV, more available upon request
3 - Extra expense needed for optional features which standard product doesn't contain, more options upon request.
4 -When ambient temperature ≥55℃, awning shall be equipped for STS on site by customer.
5- For higher operating altitude, pls consult with Huawei.

SmartACU2000D
Smart Array Controller

Smart

Support one-click commissioning
Patented anti-PID module

Simple

SmartPID2000 & Smartlogger3000B
pre-installed with multiple interfaces

Reliable

Industrial-level application
and high reliability

Technical Specifications	SmartACU2000D-D-00
Configuration	
SmartLogger	SmartLogger3000B x 1
SmartModule1000A	Optional
RS485	Supported
Number of MBUS Module [1]	1
Number of SmartPID2000 Module	0
Environment	
Operating Temperature Range	-40°C ~ 60°C (-40°F ~ 140°F)
Relative Humidity	4% ~ 100%
Max. Operating Altitude	4,000 m (13,123 ft.)
Electrical	
AC Input Voltage for Cabinet	100 V ~ 240 V, L / N (L)+ PE
AC Input Voltage for MBUS	380 V ~ 800 V, 3Ph
AC Input Voltage for PID	380 V ~ 800 V, 3Ph + FE (Functional Earth)
AC Input Frequency	50 Hz / 60 Hz
Power Supply	Standard: 12 V DC, Optional: 24 V DC[2]
Mechanical	
Cable Entries	Bottom in & out
Maintenance	Front
Dimensions (W x H x D)	640 x 770 x 315 mm (25.2 x 30.3 x 12.4 inch)
Weight	29 kg (63.9 lb.)
Protection Degree	IP65
Installation Options	Wall Mounting, Rack Mounting, Pole Mounting

1 - Compatible with communication mode of PLC (Power Line Communication).
2 - 24V DC power supply is optional to power devices that require 24Vdc input and output.

Smart PVMS

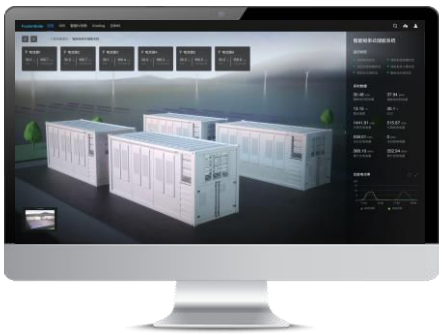

Smart

Auto faults alarming and reports issuing
Smart I-V Curve Diagnosis supported

Simple

One-click installation on PC
Fault alarms via SMS and E-mail

Reliable

Hierarchical management
Up to 25 years data storage

Network Structure

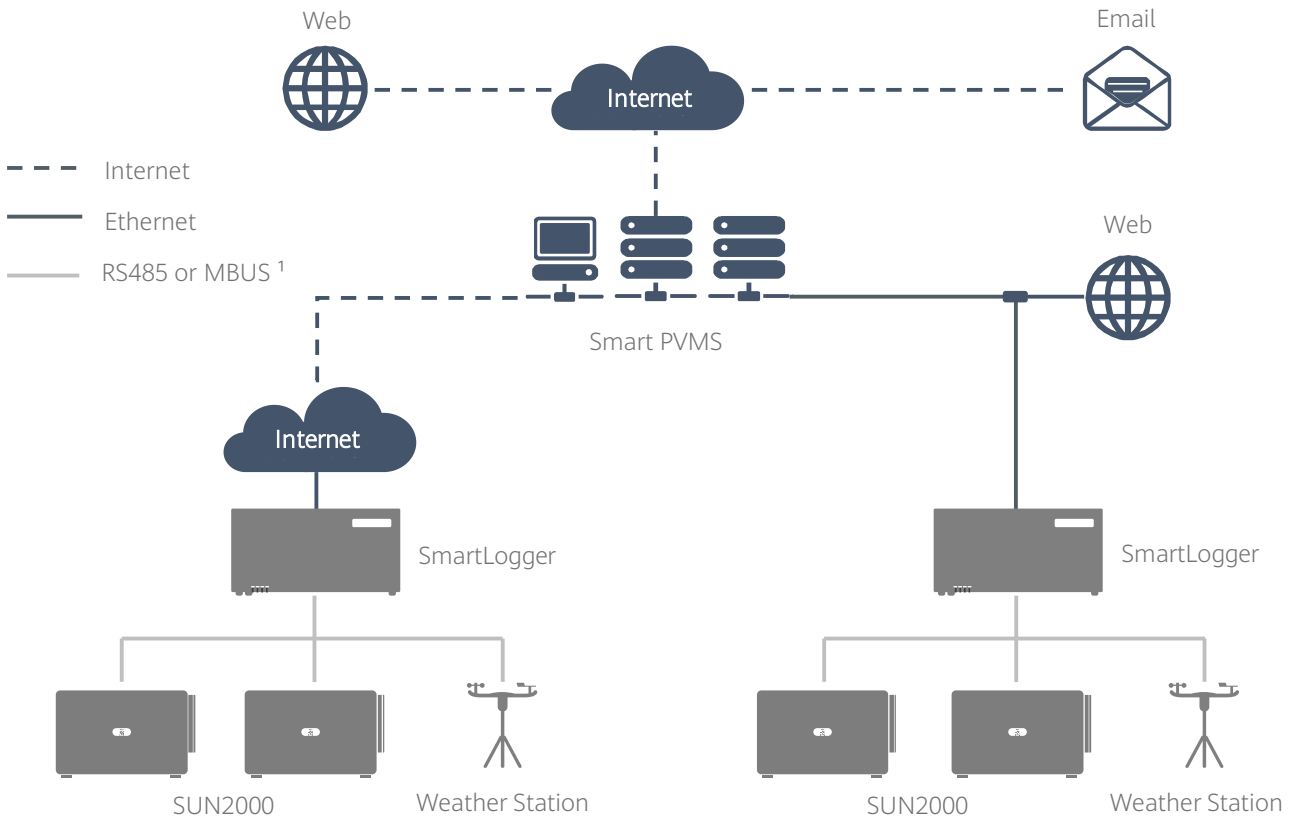

1 - Compatible with communication mode of PLC (Power Line Communication).

Smart PVMS Server Standard Version

10000 devices supported

Software pre-installation, saving installation time

Leverages patented DEMT, better energy efficiency

Technical Specification	FusionServer Pro 2288X V5 H22X-05
Max. Devices Supported	10,000 equivalent devices
Form Factor	2U rack server
Processors	2 * Intel Xeon Silver 4208 (2.1 GHz / 8-Core / 11 MB)
Memory	2 * 32 GB DDR4 RDIMM, ECC
Internal Storage	2 * 1.2 TB, SAS 2.5“ HDD, 10,000 RPM
Operating System	Euler OS
Database	Gauss DB
RAID Support	RAID 1
Network Ports	Two PCIe NICs, each supporting four GE electrical ports
Power Supply Units	2 hot-swappable PSUs, 1+1 redundancy
Power Supply	Input: 100-240 V_{AC} / 11~5.5 A ; 240 V_{DC} / 5 A
Fan Modules	4 hot-swappable counter-rotating fan modules, N+1 redundancy
Operating Temperature	5℃ ~ 40℃
Dimensions (H x W x D)	86.1 x 447 x 748 mm
Weight	29 kg
Certification	CE, UL, FCC, CCC, RoHS

Smart PVMS Server Premium Version

30000 devices supported

Software pre-installation, saving installation time

Leverages patented DEMT, better energy efficiency

Technical Specification	FusionServer Pro 2288X V5
Max. Devices Supported	30,000 equivalent devices
Form Factor	2U rack server
Processors	2 * Intel Xeon Gold 5218 (2.3 GHz / 16-Core / 22 MB)
Memory	4 * 32 GB DDR4 RDIMM, ECC
Internal Storage	2 * 1.2 TB + 8 * 1.8 TB, SAS 2.5" HDD, 10,000 RPM
Operating System	Euler OS
Database	Gauss DB
RAID Support	RAID 1, RAID 10
Network Ports	Two PCIe NICs, each supporting four GE electrical ports
Power Supply Units	2 hot-swappable PSUs, 1+1 redundancy
Power Supply	Input: 100-240 V_{AC} / 11~5.5 A ; 240 V_{DC} / 5 A
Fan Modules	4 hot-swappable counter-rotating fan modules, N+1 redundancy
Operating Temperature	5℃ ~ 40℃
Dimensions (H x W x D)	86.1 x 447 x 748 mm
Weight	30 kg
Certification	CE, UL, FCC, CCC, RoHS

Copyright © Huawei Technologies Co., Ltd. 2022. All rights reserved.
No part of this document may be reproduced or transmitted in any form or by any means without prior written consent of Huawei Technologies Co., Ltd.

Trademark Notice

, HUAWEI, and are trademarks or registered trademarks of Huawei Technologies Co., Ltd.
Other trademarks, product, service and company names mentioned are the property of their respective owners.

General Disclaimer

The information in this document may contain predictive statements including, without limitation, statements regarding the future financial and operating results, future product portfolio, new technology, etc. There are a number of factors that could cause actual results and developments to differ materially from those expressed or implied in the predictive statements. Therefore, such information is provided for reference purpose only and constitutes neither an offer nor an acceptance. Huawei may change the information at any time without notice.

HUAWEI TECHNOLOGIES CO., LTD.
Huawei Industrial Base, Bantian Longgang
Shenzhen 518129, P.R. China
Tel: 400-822-9999
Solar.Huawei.com

The text and figures reflect the current technical state at the time of printing. Subject to technical changes. Errors and omissions excepted. Huawei assumes no liability for mistakes or printing errors. For more information, please visit solar.huawei.com. Version No.:01-(201902)