LUNA2000-(5-30)-S0

Quick Guide

Issue: 04
Part Number: 31500GCU
Date: 2022-03-10

HUAWEI TECHNOLOGIES CO., LTD.

1 Product Overview

LUNA2000 Battery Appearance

The LUNA2000 battery is applicable to the grid-tied or off-grid systems of residential rooftop PV plants. It can store and release electric energy based on service requirements.

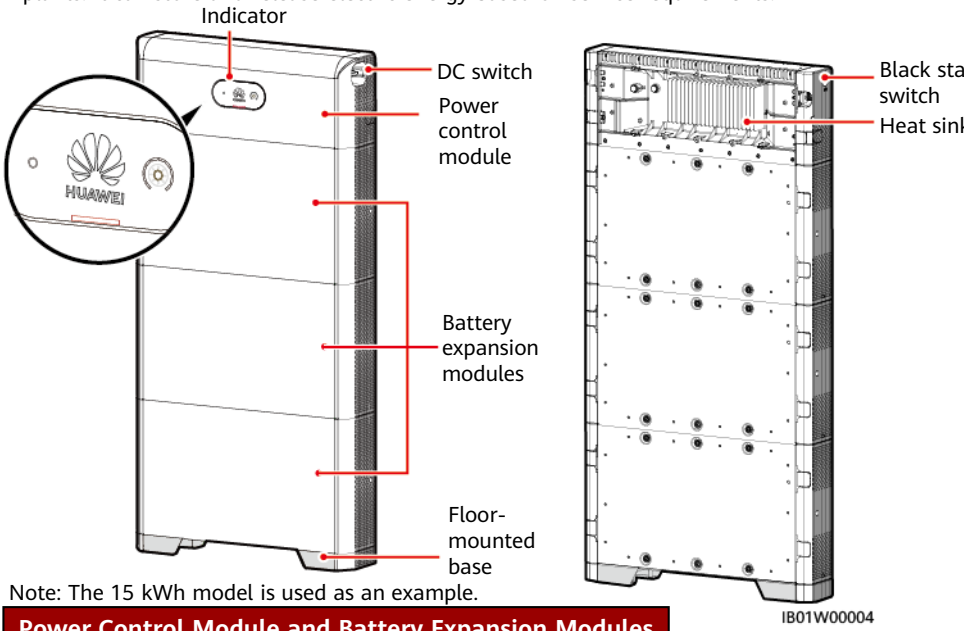

Note: The 15 kWh model is used as an example.

Power Control Module and Battery Expansion Modules

The LUNA2000 battery consists of a power control module and battery expansion modules. The power control module is 5 kW, and a battery expansion module has a standard capacity of 5 kWh.

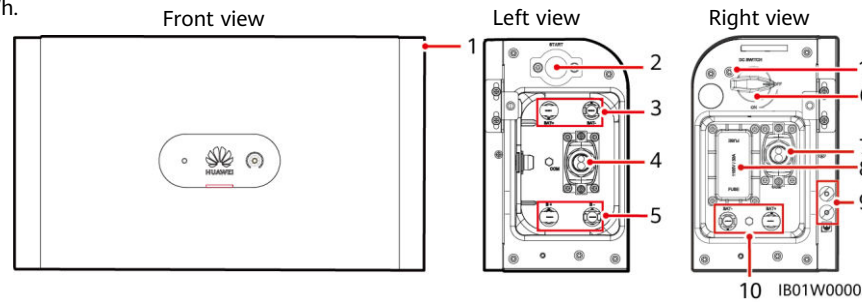

(1) Power control module (DCDC)

(2) Black start switch

(3) Battery terminals (BAT+/BAT–)

(4) COM port (COM)

(5) Battery cascading terminals (B+/B–)

(6) DC switch (DC SWITCH)

(7) COM port (COM)

(8) Fuse point

(9) Ground

(10) Battery terminals (BAT-/BAT+)

(11) Locking screw hole for the DC switch (M4)[a]

Copyright © Huawei Technologies Co., Ltd. 2022.
All rights reserved.

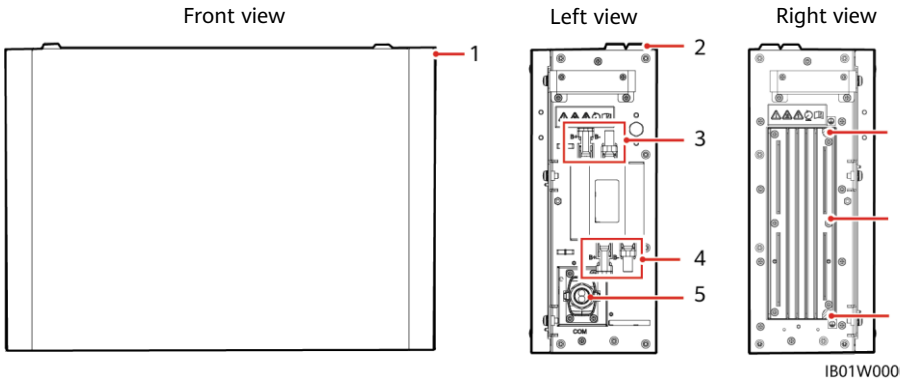

(1) Battery expansion module (2) Boss for alignment (3) Battery cascading terminals (B+/B–)

(4) Battery cascading terminals (B+/B–) (5) COM port (COM) (6) Ground point

(7) Heat sink (8) Ground point

Note a: (Optional) Remove the plastic cap and install a locking screw for the DC switch to prevent misoperations.

Battery Capacity Description

The battery supports power and capacity expansion. Two power control modules can be connected in parallel. One power control module supports a maximum of three battery expansion modules.

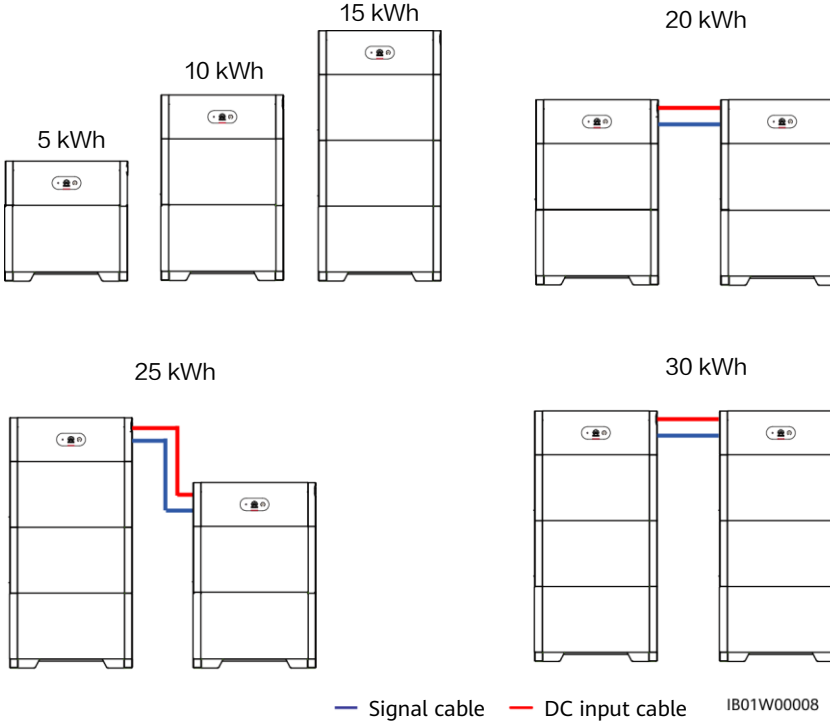

Residential Rooftop PV System for Grid Connection

The residential rooftop PV system for grid connection generally consists of the PV module, LUNA2000 battery, grid-tied inverter, management system, AC switch, and power distribution box (PDB).

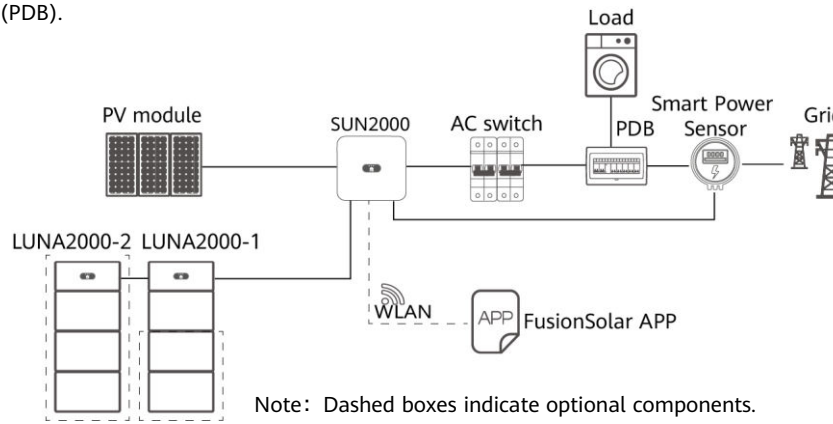

Note: Dashed boxes indicate optional components.

2 Device Installation

2.1 Installation Requirements

Installation Environment

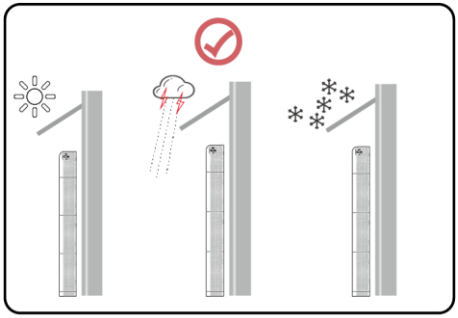

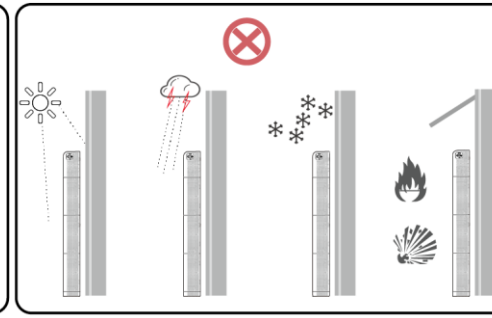

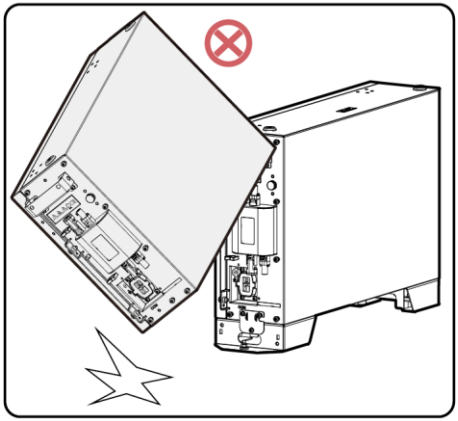

DANGER

If a battery pack is dropped or violently impacted during installation, internal damage may occur. Do not use such battery packs; otherwise, safety risks such as cell leakage and electric shock may arise.

IB01Y00001

Installation Environment Requirements

- The installation and use environment must meet relevant international, national, and local standards for lithium batteries, and are in accordance with the local laws and regulations.
- Ensure that the battery is not accessible to children and away from daily working or living areas, including but not limited to the following areas: studio, bedroom, lounge, living room, music room, kitchen, study, game room, home theater, sunroom, toilet, bathroom, laundry, and attic.
- When installing the battery in a garage, keep it away from the drive way. It is recommended that the battery be mounted on the wall higher than the bumper to prevent collision.
- When installing the battery in a basement, keep good ventilation. Do not place flammable or explosive materials around the battery. It is recommended that the battery be mounted on the wall to avoid contact with water.
- Install the battery in a dry and well-ventilated environment. Secure the battery on a solid and flat surface.
- Install the battery in a sheltered place or install an awning over it to avoid direct sunlight or rain.
- Install the battery in a clean environment that is free from sources of strong infrared radiation, organic solvents, and corrosive gases.
- For areas prone to natural disasters such as floods, debris flows, earthquakes, and typhoons/hurricanes, take corresponding precautions for installation.
- Keep the battery away from fire sources. Do not place any flammable or explosive materials around the battery.
- Keep the battery away from water sources such as taps, sewer pipes, and sprinklers to prevent water seepage.
- Do not install the battery in a position where it is easy to touch as the temperature of the chassis and heat sink is high when the battery is running.
- To prevent fire due to high temperature, ensure that the vents and the cooling system are not blocked when the battery is running.
- Do not expose the battery to flammable or explosive gas or smoke. Do not perform any operation on the battery in such environments.
- Do not install the battery on a moving object, such as ship, train, or car.
- In backup power scenarios, do not use the battery for the following situations：
  a. Medical devices substantially important to human life.
  b. Control equipment such as trains and elevators, which may cause personal injury.
  c. Computer systems of social and public importance.
  d. Locations near medical devices.
  e. Other devices similar to those described above.
- Do not install the battery outdoors in salt-affected areas because it may corrode. A salt-affected area refers to the region within 500 meters from the coast or prone to sea breeze. The regions prone to sea breeze vary with weather conditions (such as typhoons and monsoons) or terrains (such as dams and hills).

Installation Space

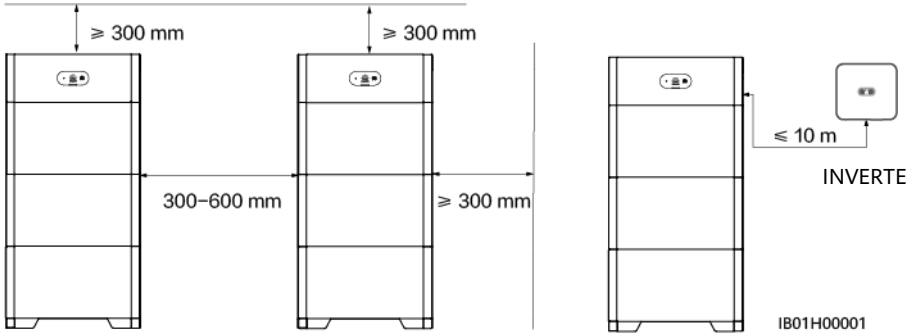

Mounting Hole Dimensions

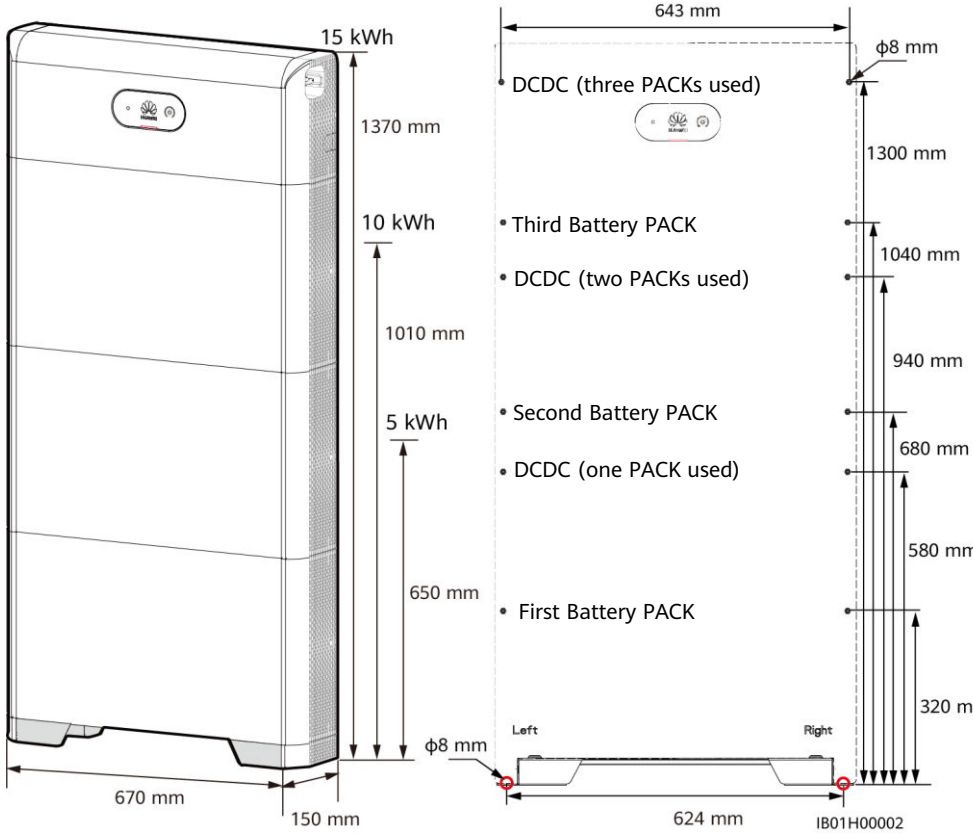

2.2 Installing the Floor Support

DANGER

Avoid drilling holes in the water pipes and cables buried in the wall.

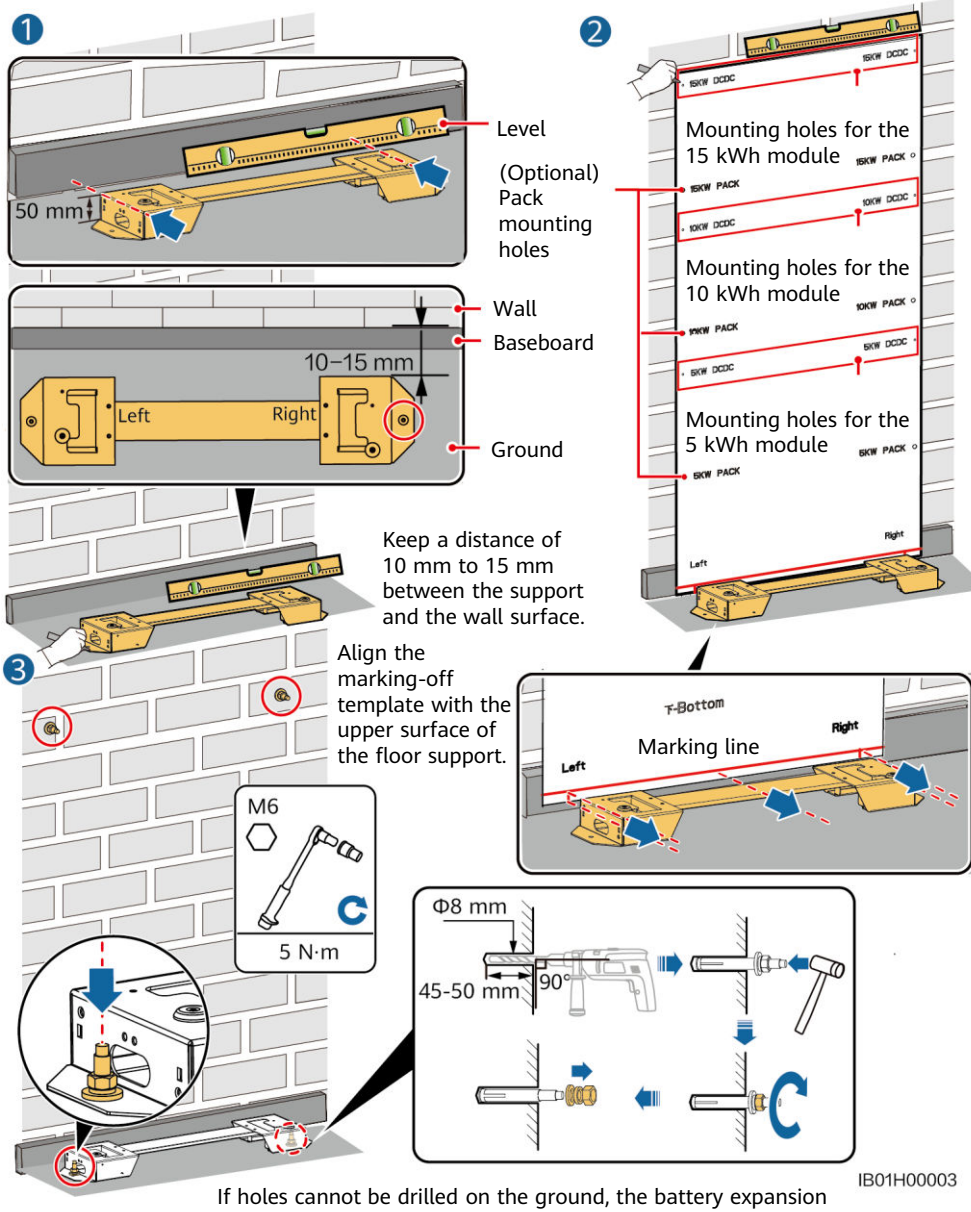

If holes cannot be drilled on the ground, the battery expansion modules must be secured on the wall.

NOTE

- The M6x60 expansion bolts delivered with the battery are mainly used for solid concrete walls and concrete floors. If other types of walls and floors are used, ensure that the walls and floors meet the load-bearing requirements (one battery expansion module weighs 50 kg) and select the bolts by yourself.
- The power control module (DCDC) must be fixed on the wall. If the device is installed in an area prone to earthquakes or vibration, you can mark the battery module mounting holes and drill holes to install expansion bolts in step 2.

2.3 Installing Battery Expansion Modules

1. Install the battery expansion modules and power control module on the support.

NOTICE

- The following describes how to install the battery expansion modules for a 15 kWh model.
- The installation of battery expansion modules for 5 kWh and 10 kWh models is the same. One battery expansion module is installed for a 5 kWh model, and two battery expansion modules are installed for a 10 kWh model.

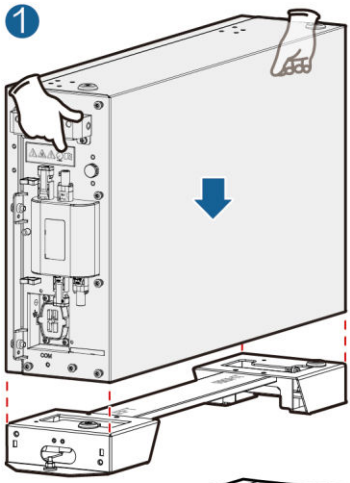

Align the first battery expansion module with the support on the floor support.

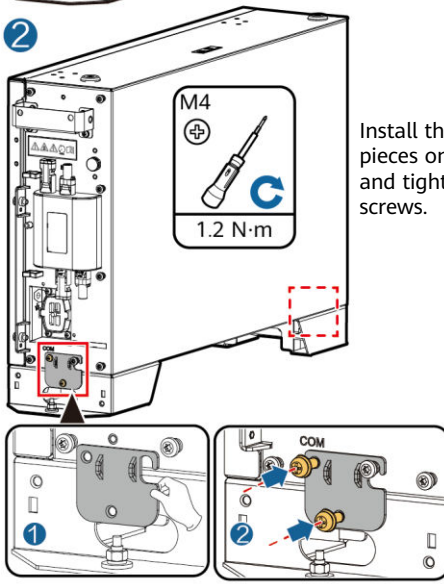

Install the connecting pieces on both sides and tighten the four screws.

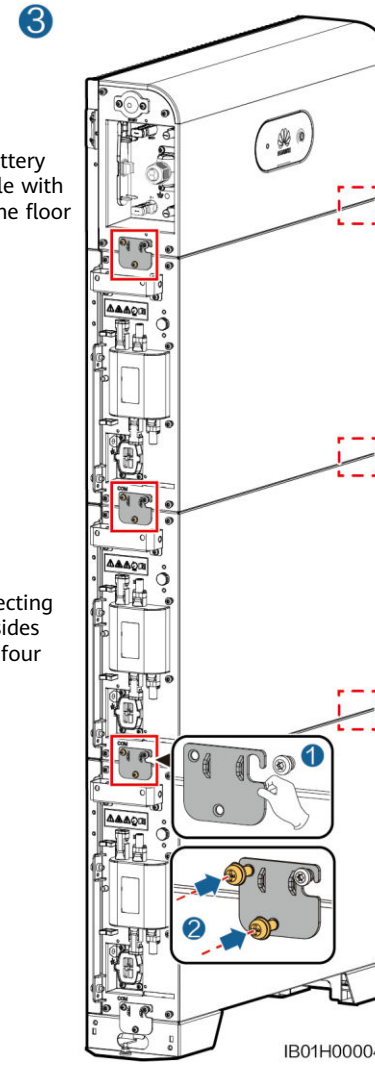

Install the remaining battery modules and power module from bottom to top. After installing a module, secure the left and right connecting pieces, and then install the next module.

2. Secure the power control module to the wall.

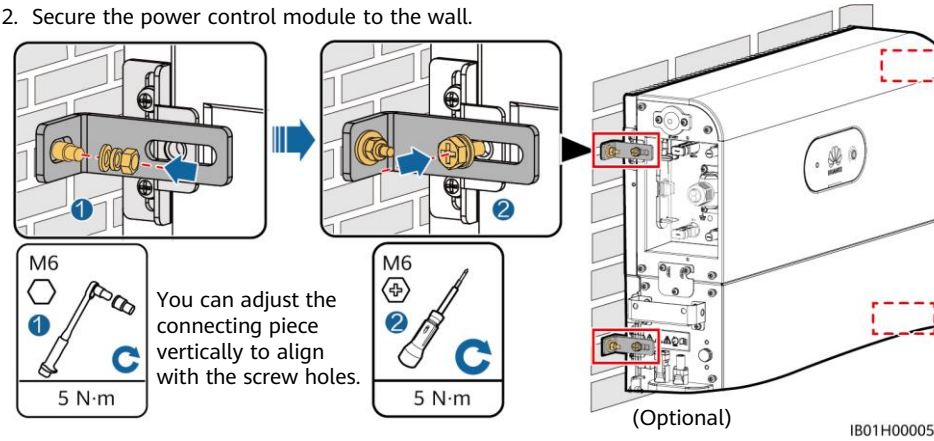

3. (Optional) Secure the battery expansion modules to the wall by referring to step 2.

2.4 Wall-mounted Installation

Mounting Hole Dimensions

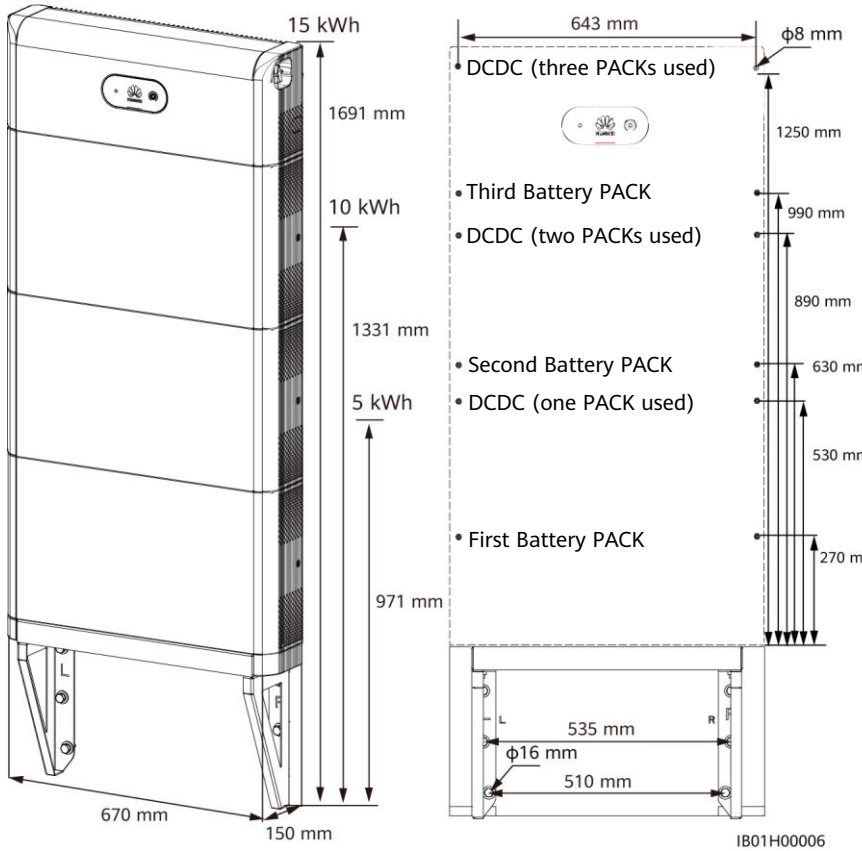

Installing the Support for Wall-mounted Installation

NOTE

For floor-mounted installation, the base is 50 mm high. If waterproofing requirements cannot be met, the battery can be installed on a wall. The mounting kits need to be purchased separately. For wall- and floor-mounted installation, ensure that the load-bearing capacity meets the requirements (one battery expansion module weighs 50 kg).

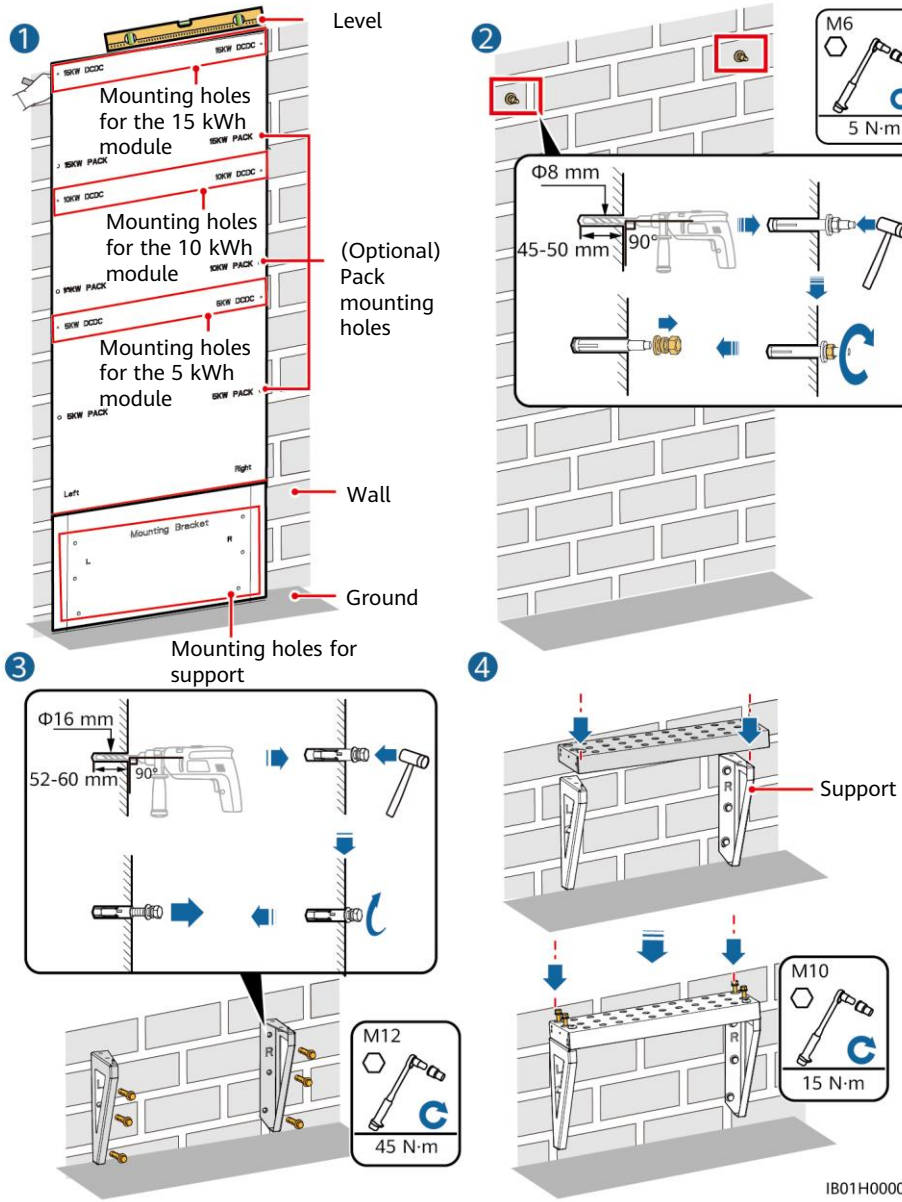

3 Internal Electrical Connections of the Battery

DANGER

- Connect cables in accordance with local installation laws and regulations.
- Before connecting cables, ensure that the DC switch on the battery and all the switches connected to the battery are set to OFF. Otherwise, the high voltage of the battery may result in electric shocks.

3.1 Installing an Internal Ground Cable

3.2 Installing Internal DC Terminals

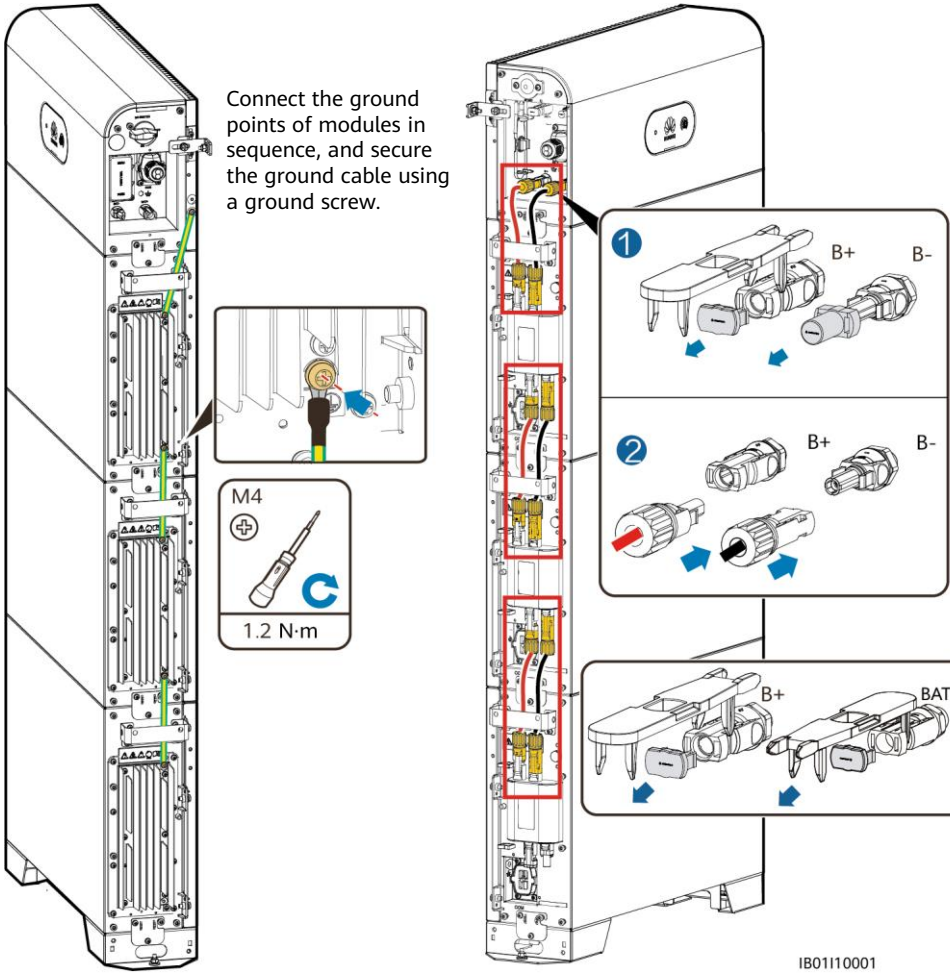

NOTE

- Internal electrical cables are delivered with the battery, see the *Packing List* in the packing case.
- The Amphenol terminal is used as the DC terminal between the power control module and the battery expansion modules.

3.3 Connecting Internal Signal Cables

NOTICE

- The protective housing of the communications terminal delivered with the device can be fastened with clips or screws based on the actual diagram.
- Install signal cables with a diameter of 5 mm and rubber plugs as described in this section. Do not use signal cables with a diameter of 7 mm.

Securing With Clips

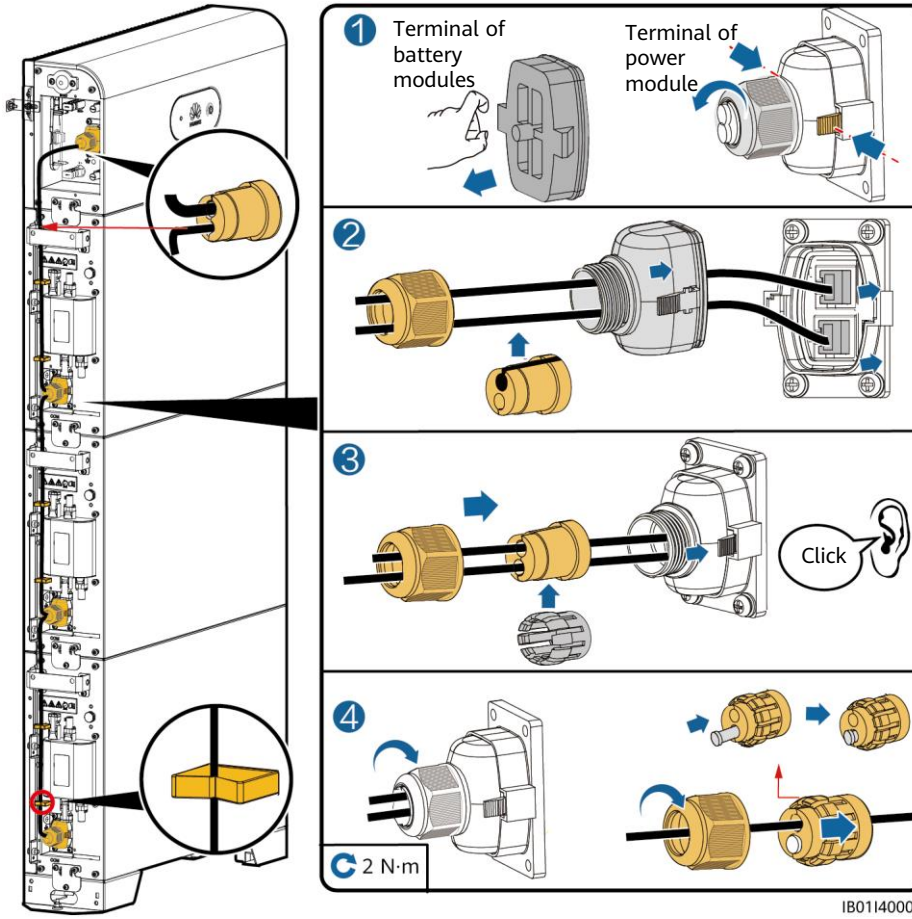

NOTICE

- When a communications terminal is connected to a single network cable, a waterproof rubber plug must be installed. Do not install a cable with a diameter of 5 mm into a Φ7 mm rubber plug.
- After inserting the terminal shell into the COM port, shake the terminal shell left and right and pull it back to ensure that it is securely installed, and tighten the nut (ensure that the rubber plug is tightly compressed). Otherwise, the waterproof performance is affected.

Securing With Screws

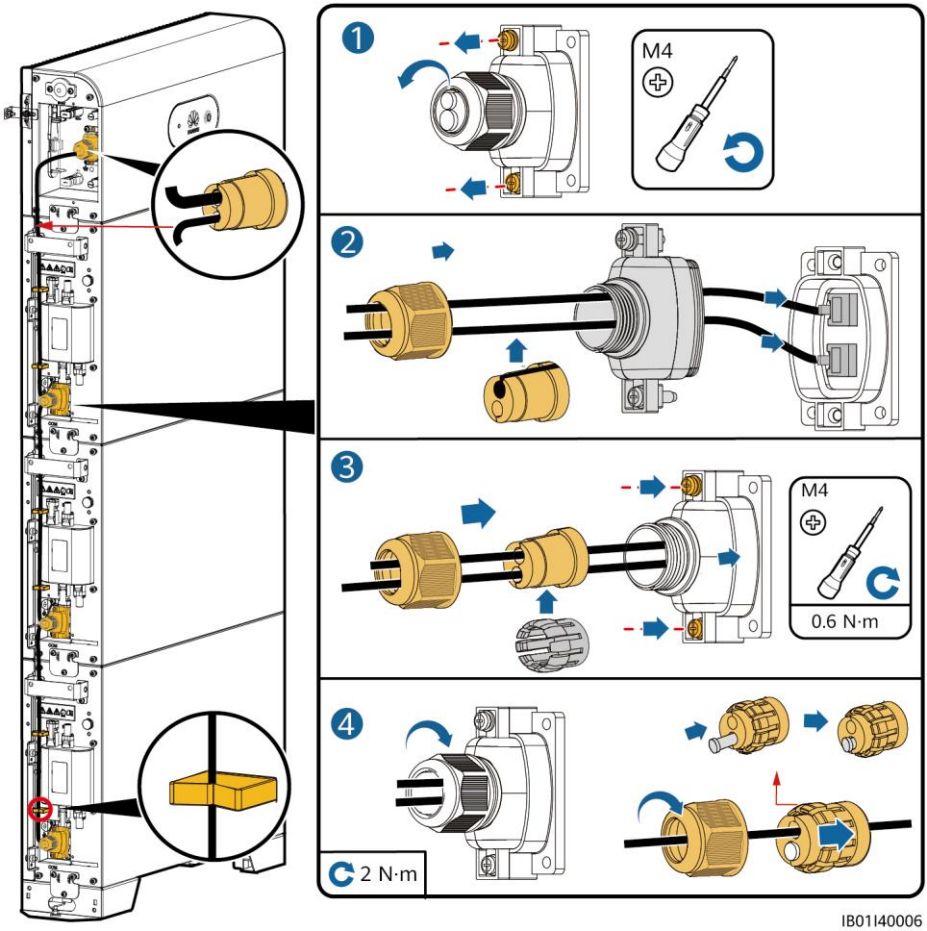

NOTICE

- When a communications terminal is connected to a single network cable, a waterproof rubber plug must be installed. Do not install a cable with a diameter of 5 mm into a Φ7 mm rubber plug.
- After inserting the terminal shell into the COM port, shake the terminal shell left and right and pull it back to ensure that it is securely installed, and tighten the nut (ensure that the rubber plug is tightly compressed). Otherwise, the waterproof performance is affected.

4 External Electrical Connections of the Battery

4.1 Preparing Cables

DANGER

Before connecting cables, ensure that the DC switch on the battery and all the switches connected to the battery are set to OFF. Otherwise, the high voltage of the battery may result in electric shocks.

NOTICE

- Connect cables in accordance with local installation laws and regulations.
- The DC input power cable and signal cable between the battery and the inverter must be less than or equal to 10 m.

Prepare cables based on site requirements.

No.	Cable	Type	Conductor Cross-Sectional Area Range	Outer Diameter
1	Ground cable	Single-core outdoor copper-core cable	10 mm^2	-
2	DC input power cable (inverter to battery and battery to battery)	Common outdoor PV cable in the industry	4–6 mm^2	5.5–9 mm
3	Signal cable (inverter to battery and battery to battery)	Outdoor shielded twisted pair cable (8 cores)	0.20–1 mm^2	6.2–7 mm

4.2 Routing Cables Out of the Cable Hole

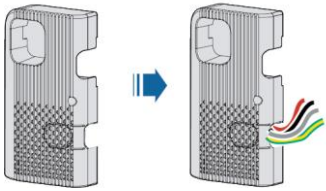

IB01I10002

NOTICE

Before connecting external cables, route the cables through the cable hole to avoid disconnecting after installation.

4.3 Installing a Ground Cable

NOTE

- Ground a ground point of the power control module.
- Apply silica gel or paint around the ground terminal after the ground cable is connected.

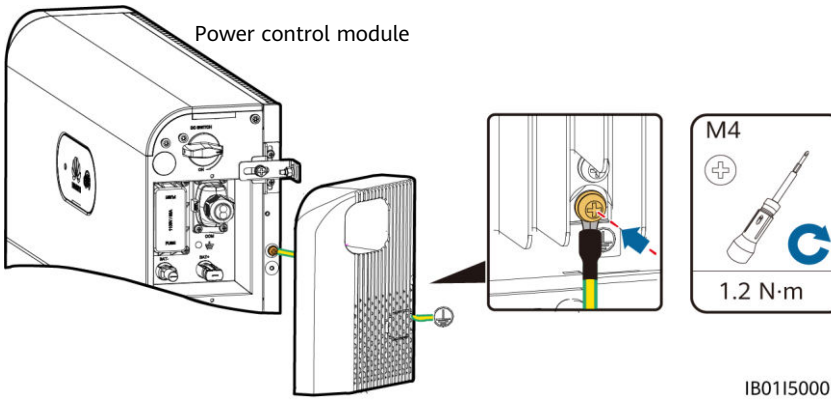

IB01I50001

4.4 Installing DC Input Power Cables

DANGER

1. You are advised to connect the battery terminals (BAT+ and BAT–) on the switch side to the inverter and connect the other side to the cascaded battery.
2. For battery terminals, use the delivered Staubli MC4 positive and negative metal terminals and DC connectors. Using incompatible positive and negative metal terminals and DC connectors may burn the cables or damage the module. The resulting device damage will not be covered under warranty.

Assembling DC Connectors

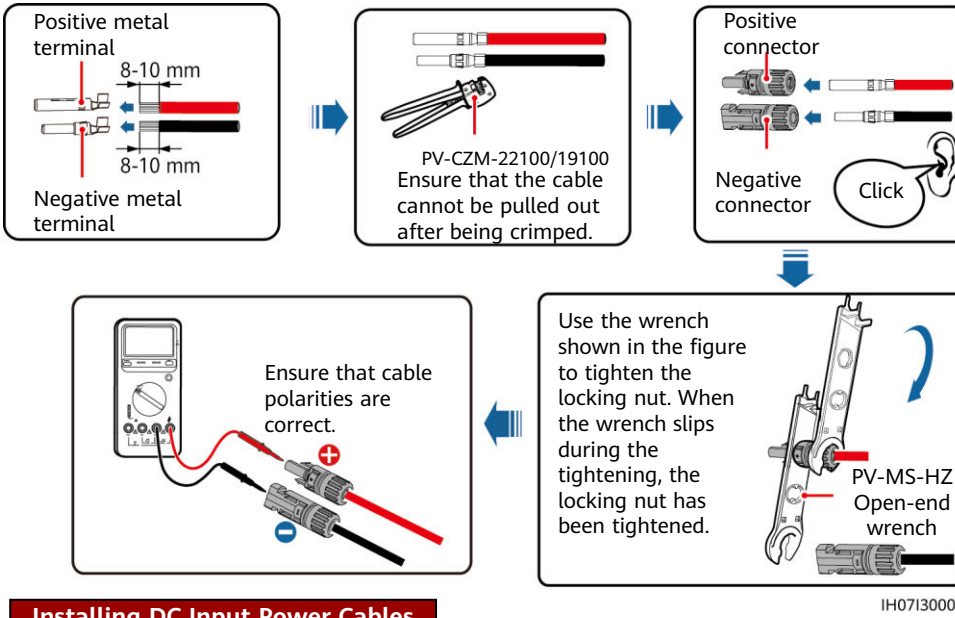

IH07I30001

Installing DC Input Power Cables

DANGER

Use dedicated insulated tools to connect cables. Ensure that battery cables are connected to correct polarities. If the battery cables are reversely connected, the battery may be damaged.

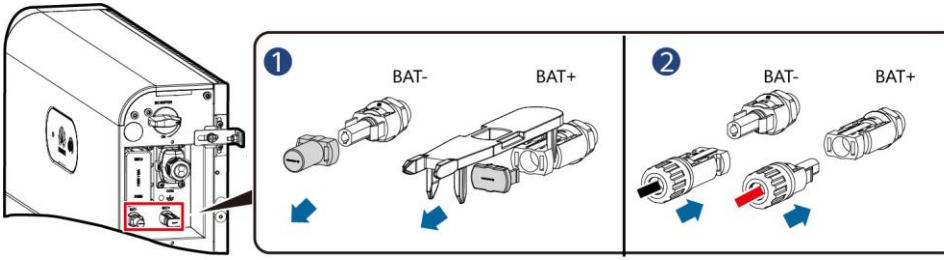

IB01I30001

4.5 Installing a Signal Cable

NOTICE

- When laying out a signal cable, separate it from power cables and keep it away from strong interference sources to prevent communication interruption.
- Ensure that the protection layer of the cable is inside the connector, that excess core wires are cut off from the protection layer, that the exposed core wire is totally inserted into the cable hole, and that the cable is connected securely.
- Use a plug to block the idle cable hole with the waterproof rubber ring, and then tighten the locking cap.
- If multiple signal cables need to be connected, ensure that the outer diameters of the signal cables are the same.

Communications Terminal Description

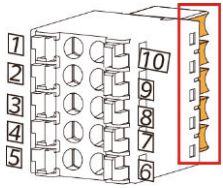

Pins 6–10 are close to the groove side.

NOTE

It is recommended that the right side of COM port be connected to the inverter and the left side of the COM port be connected to the cascaded batteries. The communications terminal insertion directions on the left and right side of the COM port are different. Insert the communications terminals in the directions shown in the figures.

Left

Right

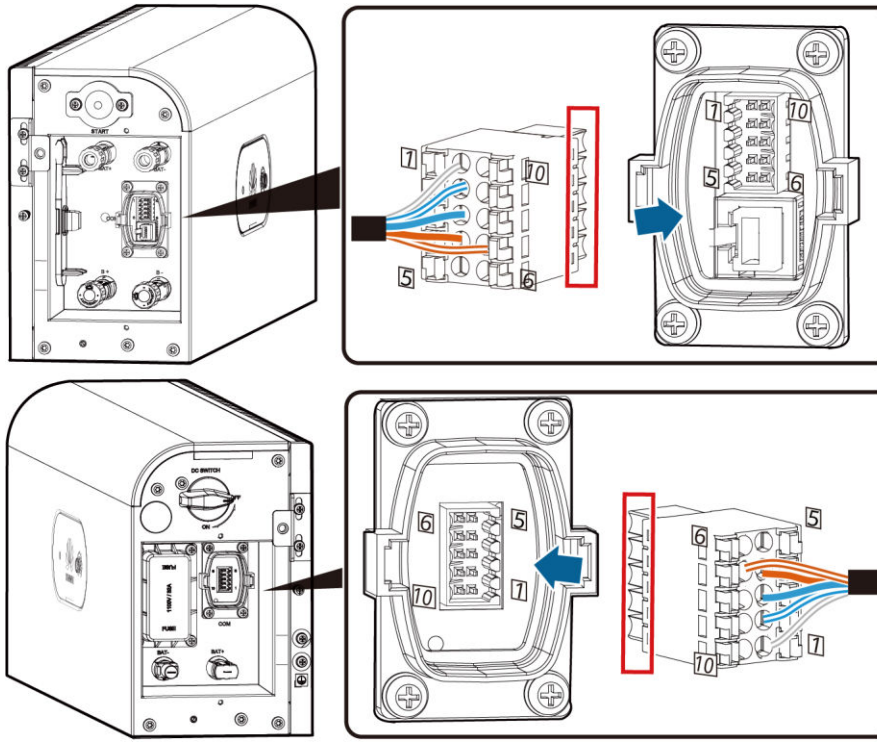

IB01W10008

COM Port Pin Definitions

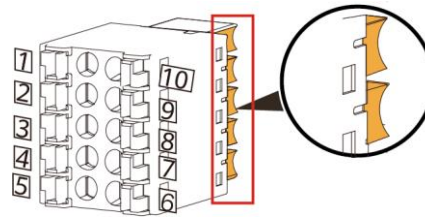

Pins 6–10 are close to the groove side.

NOTE

The communications terminals on the inverter side need to be connected to RS485+\RS485-, EN+\EN-, and PE. The communications terminals on the cascading side need to be connected to RS485+\RS485-, EN+\EN-, CANH\CANL, and PE.

No.	Label	Definition	Description
1	PE	Ground point on the shield layer	Ground point on the shield layer
2	Enable-	Enable signal GND	Connects to the enable signal GND of the inverter.
3	Enable+	Enable signal+	Connects to the enable signal of the inverter.
4	485A	RS485A, RS485 differential signal+	Connects to the RS485 signal port + of the inverter or cascaded batteries.
5			
6	485B	RS485B, RS485 differential signal–	Connects to the RS485 signal port – of the inverter or cascaded batteries.
7			
8	CANL	Extended CAN bus port	Used for signal cable cascading in battery cascading scenarios.
9	CANH	Extended CAN bus port	Used for signal cable cascading in battery cascading scenarios.
10	PE	Ground point on the shield layer	Ground point on the shield layer

Connecting the Communications Terminal to the Inverter

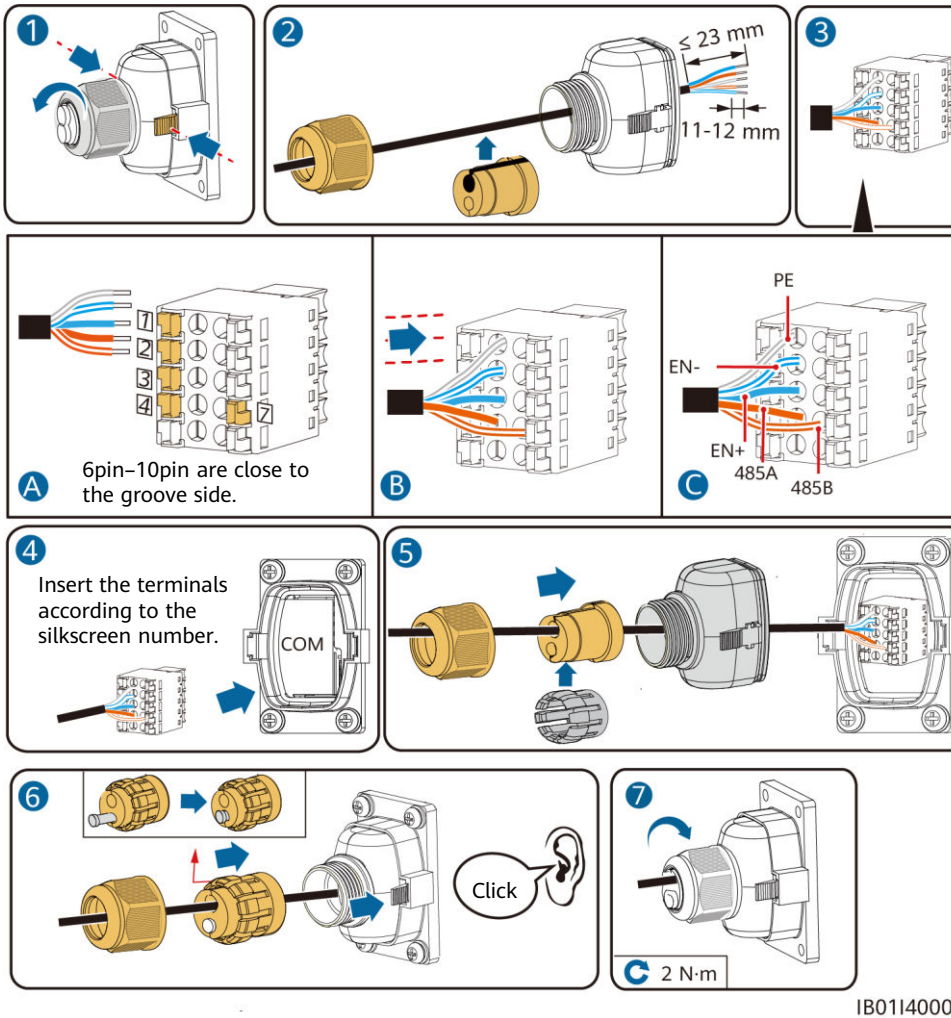

IB01I40002

4.6 (Optional) Cable Connections in Cascading Scenarios

Cascading Networking

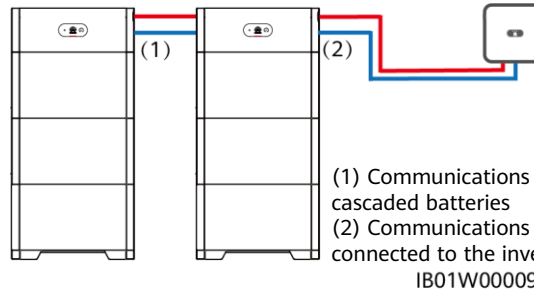

(1) Communications terminal for cascaded batteries
(2) Communications terminal connected to the inverter

IB01W00009

— Signal cable — DC input cable

Cascading DC Input Connection

Prepare DC connectors and connect DC battery cascading terminals (BAT+ and BAT–) for cascaded batteries. For details, see section 4.4 "Installing DC Input Power Cables."The Staubli MC4 positive and negative metal terminals and DC connectors on the cascading side need to be purchased by customers.

Connecting the Communications Terminal for Cascaded Batteries

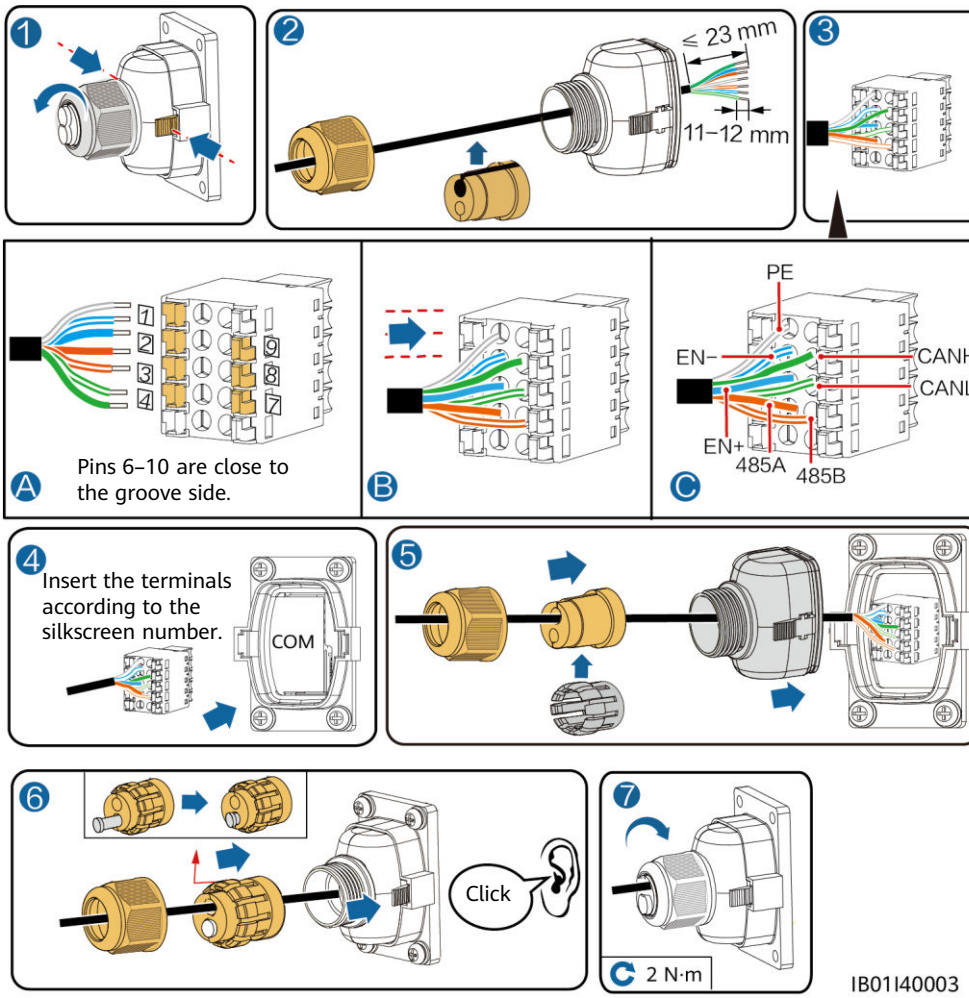

NOTICE

- When a communications terminal is connected to a single network cable, a waterproof rubber plug must be installed.
- After inserting the terminal shell into the COM port, shake the terminal shell left and right and pull it back to ensure that it is securely installed, and tighten the nut (ensure that the rubber plug is tightly compressed). Otherwise, the waterproof performance is affected.

4.7 Connecting Cables to the Inverter

SUN2000-(2KTL-6KTL)-L1

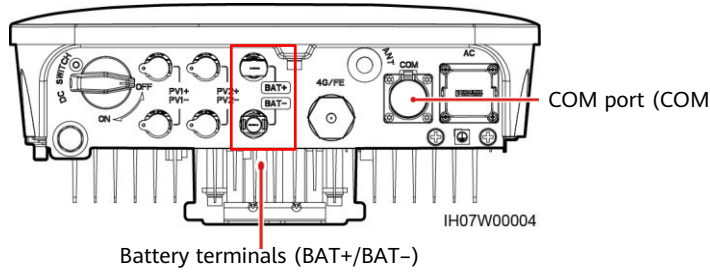

COM Port Pin Definitions

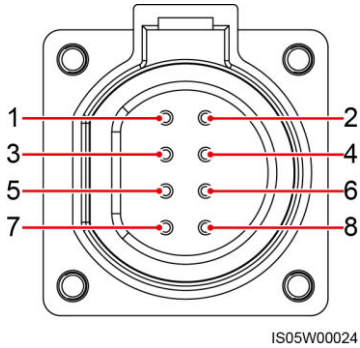

No.	Label	Definition	Description
3	485B2	RS485B, RS485 differential signal–	Used for connecting to the RS485 signal ports of the battery.
4	485A2	RS485A, RS485 differential signal+	
5	GND	GND	Used for connecting to GND of the enable signal.
6	EN+	Enable signal+	Used for connecting to the enable signal of the battery.

SUN2000-(3KTL-10KTL)-M1

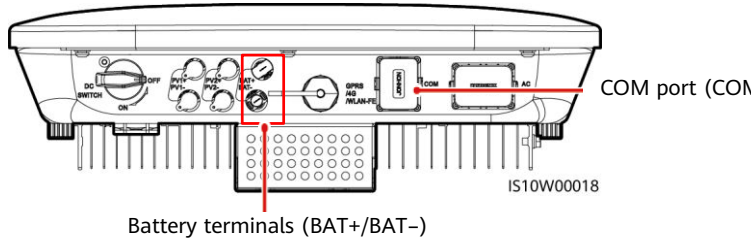

COM Port Pin Definitions

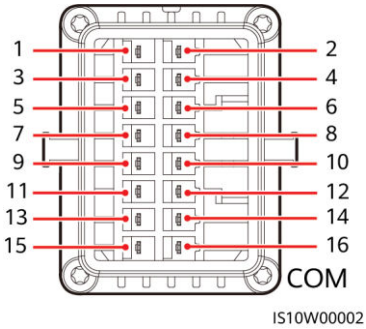

No.	Label	Definition	Description
5	PE	Ground point on the shield layer	Ground point on the shield layer
7	485A2	RS485A, RS485 differential signal+	Used for connecting to the RS485 signal ports of the battery.
9	485B2	RS485B, RS485 differential signal–	
11	EN	Enable signal+	Used for connecting to the enable signal of the battery.
13	GND	GND	Used for connecting to GND of the enable signal.

SUN2000-(2KTL-6KTL)-L1

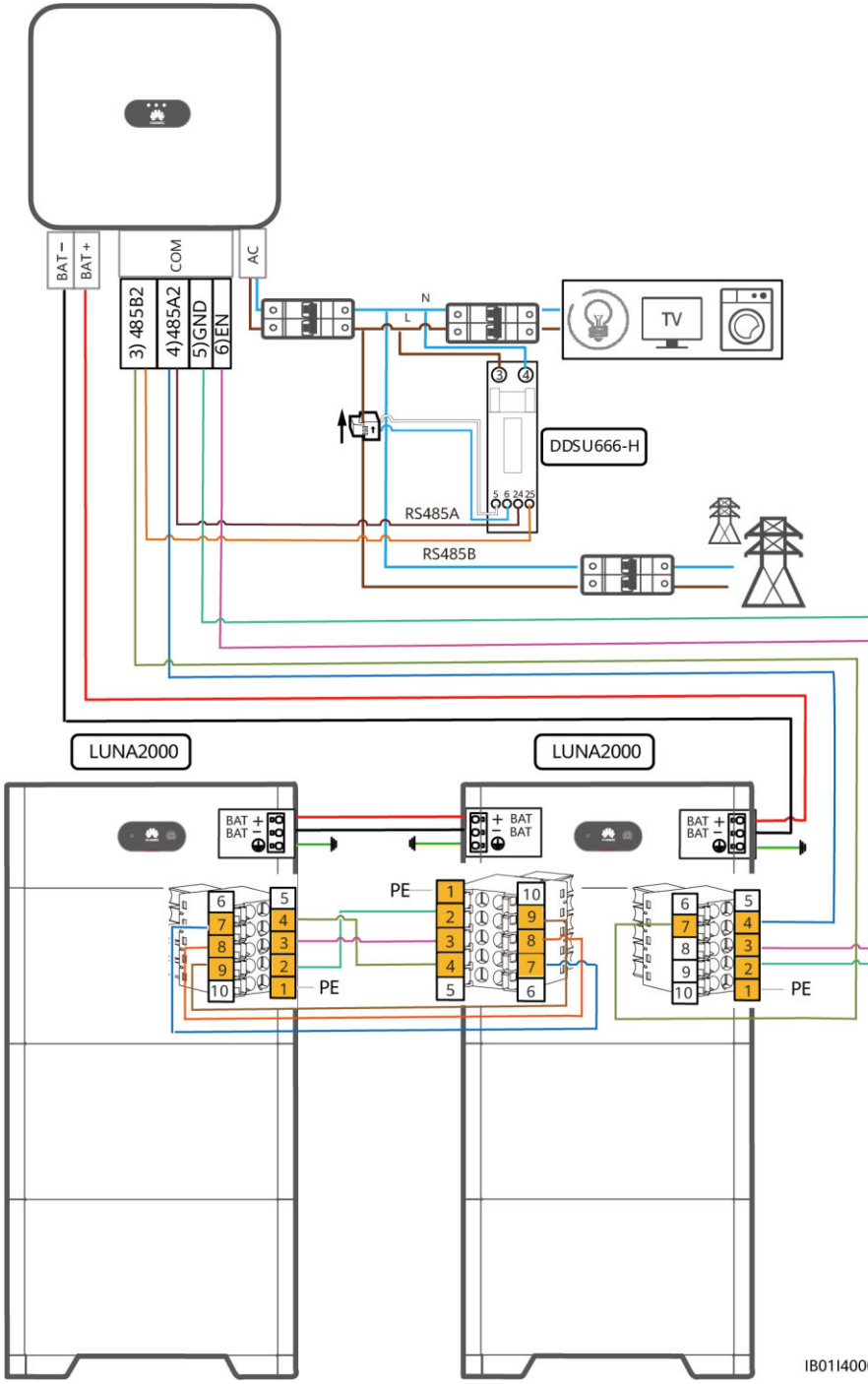

SUN2000-(3KTL-10KTL)-M1

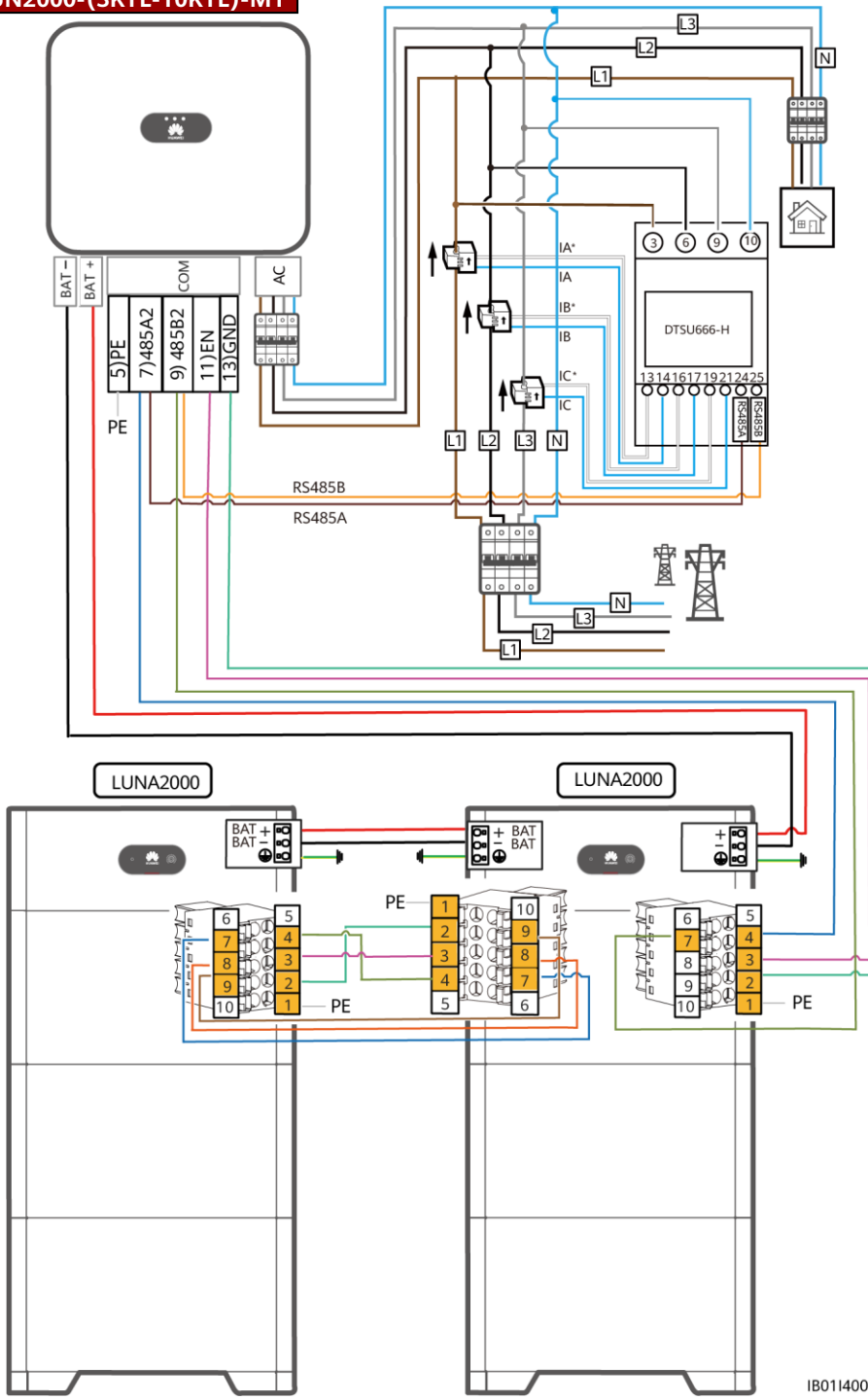

5 Verifying the Installation

5.1 Installing the Cover

After electrical connections are complete, check that cables are correctly and securely connected, install the external protective cover, and secure it using screws.

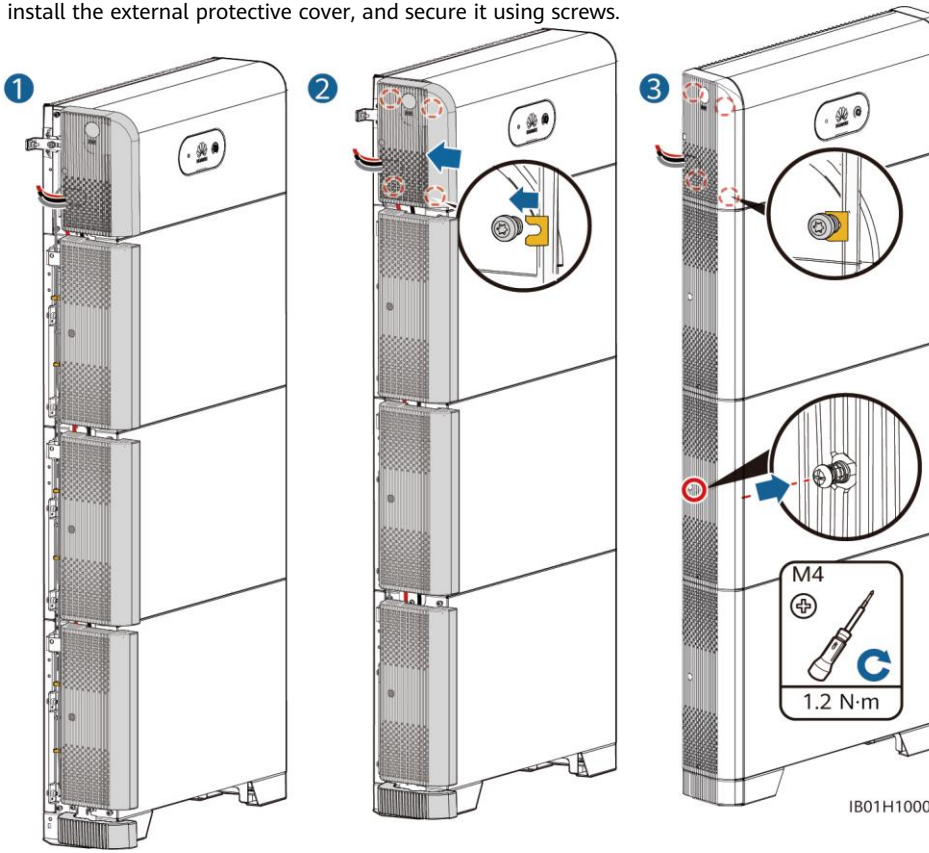

5.2 Verifying the Installation

No.	Acceptance Criterion
1	The battery is installed correctly and securely.
2	The cables are routed properly as required by the customer.
3	Cable ties are secured evenly and no burr exists.
4	The ground cable is connected correctly and securely.
5	The battery switch and all switches connected to the battery are OFF.
6	The DC input power cables and signal cables are connected correctly and securely.
7	Idle terminals and ports are locked by watertight caps.
8	The installation space is proper, and the installation environment is clean and tidy.

6 Power-On Commissioning

6.1 Connecting the Battery Supply

NOTICE

- Power on the LUNA2000 within 24 hours after unpacking. The power-off time cannot exceed 24 hours during maintenance.
- After turning on the battery switch, power on the inverter. For details about how to power on the inverter, see the quick guide for the corresponding inverter model.
- If no PV module is configured, press the black start button.

Turn on the DC switch on the battery. After the battery is installed and powered on for the first time, the ring LED blinks for three circles. Observe the battery indicator to check the running status.

Type	Status (Blinking at long intervals: On for 1s and then Off for 1s; Blinking at short Intervals: On for 0.2s and then Off for 0.2s)		Meaning
Running indication			N/A
	Steady green	Steady green	Operating mode
	Blinking green at long intervals	Blinking green at long intervals	Standby mode
	Off	Off	Sleep mode
	Blinking red at short intervals	N/A	Battery power control module environment alarm
	N/A	Blinking red at short intervals	Battery expansion module environment alarm
	Steady red	N/A	Battery power control module fault
	N/A	Steady red	Battery expansion module fault
Battery system indication			N/A
	Display green		Indicates battery level. One bar represents 10%.
	Steady red		The first three bars indicate the number of faulty battery expansion modules.

6.2 Downloading the App

Method 1: Search for FusionSolar on Huawei AppGallery and download the latest installation package.

Method 2: Access https://solar.huawei.com using the mobile phone browser and download the latest installation package.

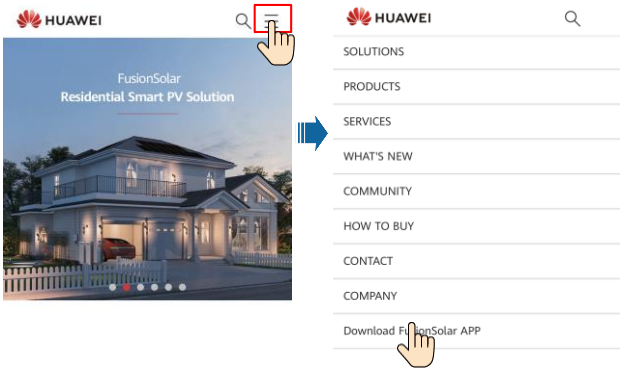

Method 3: Scan the following QR code and download the latest installation package.

FusionSolar

6.3 Battery Deployment

When the app connects to the inverter, a message is displayed, asking you to upgrade the inverter version. Smart Dongle V100R001C00SPC117 and later versions support LUNA2000 battery. But the Smart Dongle cannot be upgraded locally. You need to perform the upgrade through the management system. The upgrade procedure is updated in the Quick Guide. You can scan the QR code on the right to obtain the Quick Guide.

Creating a Plant

Download and install the FusionSolar app of the latest version by referring to the quick guide for the corresponding inverter model or the FusionSolar App Quick Guide. Register as an installer and create a PV plant or owner (skip this step if an account exists). You can obtain the FusionSolar App Quick Guide by scanning the QR code.

Adding Batteries for an Existing Plant

Log in to the FusionSolar app using the installer's account, choose **My** > **Device Commissioning.** Tap **Quick Settings** on the home screen to add the battery and set the battery working mode.

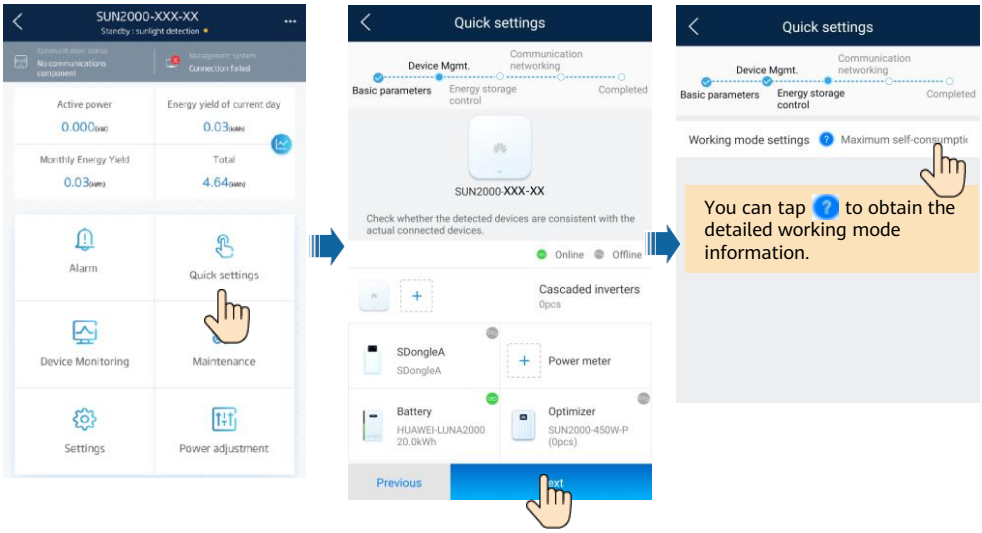

6.4 Setting Battery Control

On the home screen, choose **Power adjustment** > **Battery control**, and set the battery parameters and working mode.

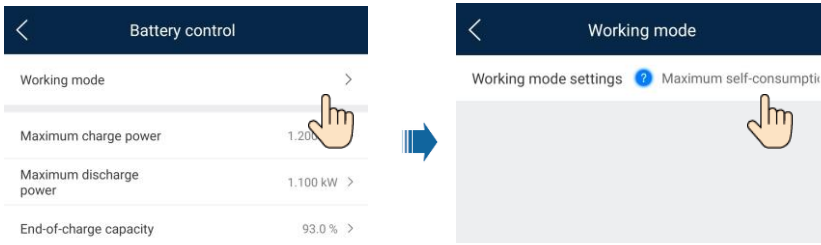

6.5 Battery Status Check

After the battery is added, tap **Device monitoring** on the home screen to view the running status, level, power, and charge and discharge status of the battery.

6.6 Maintenance and Upgrade

Battery Upgrade

When the network is connected, the app connection screen, tap ··· > **File download** in the upper-right corner. Then on the home screen, choose **Maintenance** > **Upgrade device** to upgrade the battery version.

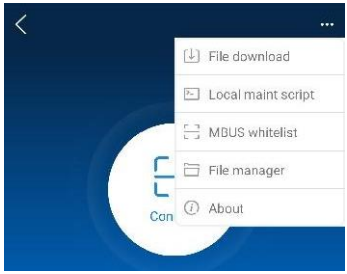

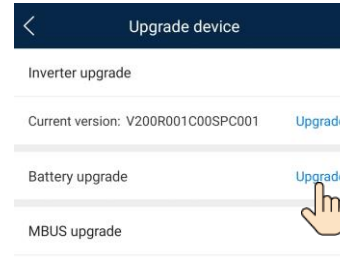

Storage and Recharging

The batteries need to be recharged for a certain period of storage. For details, see the user manual.

Fuse Replacement

If a fuse needs to be replaced, replace it by referring to the user manual.

7 Statement

1. The information in this document is subject to change without notice. Every effort has been made in the preparation of this document to ensure accuracy of the contents, but all statements, information, and recommendations in this document do not constitute a warranty of any kind, express or implied. You can download this document by scanning the QR code.
2. Before installing the device, read the user manual carefully to get familiar with product information and safety precautions.
3. Only certified electricians are allowed to operate the device. Operation personnel must wear proper personal protective equipment (PPE).
4. Before installing the device, check that the package contents are intact and complete against the packing list. If any damage is found or any component is missing, contact your dealer.
5. The device damage caused by the violation of instructions in this document is not covered under warranty.
6. The cable colors involved in this document are for reference only. Select cables in accordance with local cable specifications.

Quick Guide

User Manual

Installation Video

8 Customer Service Contact Information

Customer Service Contact Information			
Region	**Country**	**Email**	**Hotline**
Europe	France	eu_inverter_support@huawei.com	0080033888888
	Germany		
	Spain		
	Italy		
	United Kingdom		
	Netherlands		
	Others	For details, visit solar.huawei.com.	
Asia Pacific	Australia	eu_inverter_support@huawei.com	1800046639
	Turkey	eu_inverter_support@huawei.com	N/A
	Malaysia	apsupport@huawei.com	0080021686868 /1800220036
	Thailand		(+66) 26542662 (charged by local call)
			1800290055 (toll-free in Thailand)
	China	solarservice@huawei.com	400-822-9999
	Others	apsupport@huawei.com	0060-3-21686868
Japan	Japan	Japan_ESC@ms.huawei.com	0120258367
India	India	indiaenterprise_TAC@huawei.com	1800 103 8009
Republic of Korea	Republic of Korea	Japan_ESC@ms.huawei.com	N/A
North America	United States	eu_inverter_support@huawei.com	1-877-948-2934
	Canada	eu_inverter_support@huawei.com	1-855-482-9343
Latin America	Mexico	la_inverter_support@huawei.com	018007703456 /0052-442-4288288
	Argentina		0-8009993456
	Brazil		0-8005953456
	Chile		800201866 (Only for Fixed)
	Others		0052-442-4288288
Middle East and Africa	Egypt	eu_inverter_support@huawei.com	08002229000 /0020235353900
	United Arab Emirates		08002229000
	South Africa		0800222900
	Saudi Arabia		8001161177
	Pakistan		0092512800019
	Morocco		0800009900
	Others		0020235353900

Huawei Technologies Co., Ltd.
Huawei Industrial Base, Bantian, Longgang
Shenzhen 518129 People's Republic of China
solar.huawei.com